VAMEIN de españa, s.a.
VALVULAS DE MARIPOSA Y ACCIONAMIENTOS
ENGINEERED BUTTERFLY VALVES

TECHNICAL MANUAL

(Ed. 13, Date: October 2019)

VAMEIN DE ESPAÑA, S.A.

www.vamein.com

PREAMBLE

In 1968, our founder Mr. Aurelio Almodóvar García finds an interest in the domestic market for butterfly valves. From this moment onwards he studies in depth the technical characteristics and economic advantages of this product.

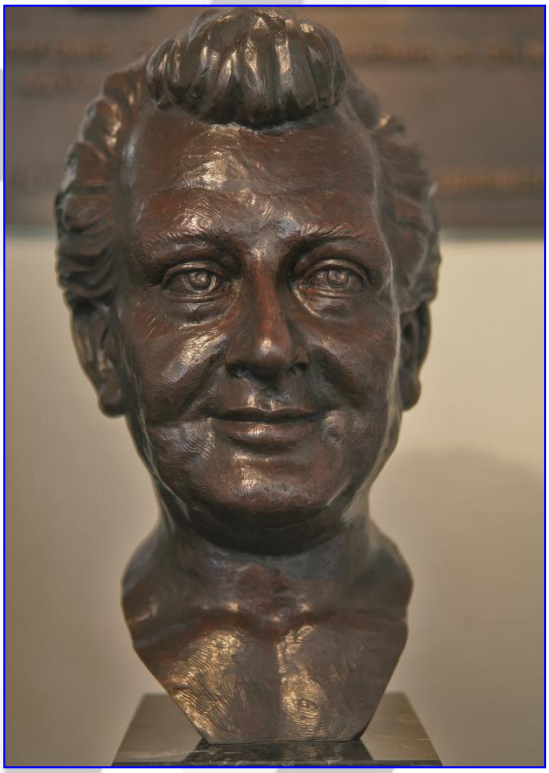

The dedication to serve, underlined by perseverance, creative spirit and industrial and commercial intuition of this entrepreneur, drives him through research, to design and manufacture the best butterfly valve produced in Spain to supply all domestic and international markets.

To start this large initiative, which meant compromise to its founder, it was necessary to invest large amounts of capital so that a butterfly valve of excellent quality would be produced to set a new higher standard to world competition. Since Mr. Aurelio Almodóvar García took control of operations, the already existing plan is pushed ahead by directing the manufacture of the design, abiding to the international construction norms, manufacturing of the range, material and actuator selections, etc., until the most rigorous tests are passed, making the most severe critics happy. Two years later he would be rewarded for such an enterprise through the birth of the brand name "VAMEIN" and the foundation of "VAMEIN DE ESPAÑA, S.A." with 100 % Spanish capital.

VAMEIN DE ESPAÑA, S.A.
Calle Temple, 1 - 28760 - Tres Cantos
Madrid (ESPAÑA)
Phone. (+34) 91 803 45 17 – Email: comercial@vamein.com

"VAMEIN DE ESPAÑA, S.A." established itself in the Industrial Estate of Tres Cantos situated in the north of Madrid which happens to be the most important technological estate in the Iberian Peninsula. The high technology of the products manufactured was widely recognized and accepted in a short period of time.

OFFICES AND FACTORY OF " VAMEIN DE ESPAÑA, S.A."
TRES CANTOS (MADRID)

As demand for our butterfly valve and its actuators was increasing in all five continents and due to the forecasts made by our founding president towards the XXI century, in addition to the daily innovations incorporated with upmost precision and perfection, we keep our hierarchy of values at a top level to completely satisfy our customer's aspirations

VAMEIN DE ESPAÑA, S.A.
Calle Temple, 1 - 28760 - Tres Cantos
Madrid (ESPAÑA)
Phone. (+34) 91 803 45 17 – Email: comercial@vamein.com

The VAMEIN DE ESPAÑA, S.A. engineering, design, quality control and manufacturing departments over a surface of 6.000 m², have been equipped with Computer Aided Design (CAD) in engineering, a lab for non destructive testing (NDT), a quality warranty department, our own foundry, workshops and labs, certain sections equipped with high technology computing systems, transfer machines, machining centres by C.N.C, etc., which have been previously programmed for the manufacture of butterfly valves, in accordance with the **ISO-9001** international standard.

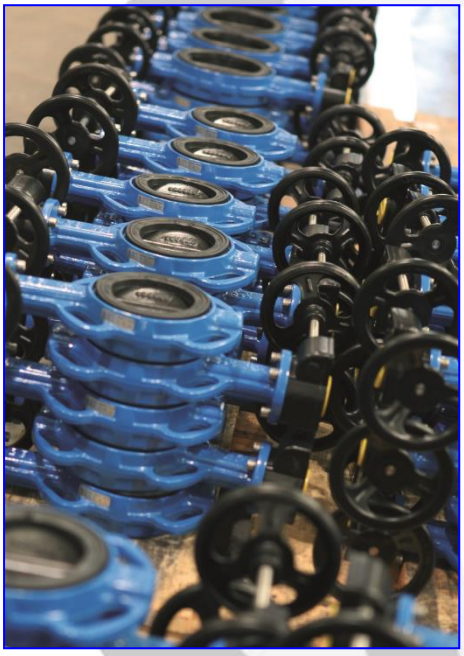

Throughout the world, USA, CANADA, AUSTRALIA, ASIA, EUROPE and SOUTH AMERICA, the VAMEIN butterfly valve has been able to maintain its constant presence as well as its prestige at the same time as rising above global industrial and business policy due to Mr Aurelio Almodóvar Garcia's philosophy, which his heirs are to carry on and gain experience from, taking on challenges from the future of the valve business and abiding to four main points: RELIABILITY, GUARRANTY, QUALITY and PRICE.

VAMEIN DE ESPAÑA, S.A.
Calle Temple, 1 - 28760 - Tres Cantos
Madrid (ESPAÑA)
Phone. (+34) 91 803 45 17 – Email: comercial@vamein.com

INDEX

1. RESILIENT SEATED VALVES GENERAL INFORMATION.

2. RESILIENT SEATED VALVES. MANUFACTURING RANGE.

3. ACTUATORS FOR RESILENT SEATED VALVES.

4. MATERIAL SELECTION / KEY FIGURES / TORQUE TABLE FOR RESILENT SEATED VALVES.

5. DATA FOR PURCHASE ORDER.

6. QUALITY ASSURANCE.

7. HYDRAULIC FEATURES OF THE VAMEIN BUTTERFLY VALVES.

8. ASSEMBLY AND BOLTING LIST.

9. MAINTENANCE AND INSTRUCTIONS TO ASSEMBLE RESILIENT SEATED VALVES AND LEVERS.

10. GENERAL SALES CONDITIONS AND STATUS OF TECHNICAL HANDBOOK EDITION.

11. TEFLON SEATED VALVES (GALACTIC VALVES).

DIRECT ACCESS TO:

COMPLETE INDEX.

VAMEIN DE ESPAÑA, S.A.
Calle Temple, 1 - 28760 - Tres Cantos
Madrid (ESPAÑA)
Phone. (+34) 91 803 45 17 – Email: comercial@vamein.es

1. RESILIENT SEATED VALVES GENERAL INFORMATION.

1.1. FEATURES. ..... 2 to 3
1.2. APLICATIONS. ..... 4 to 18
1.3. CONSTRUCTION AND STANDARDS. ..... 20 to 26
1.4. STANDARD MATERIALS FOR THE VAMEIN RESILIENT SEATED BUTTERFLY VALVES. ..... 28 to 32
1.5. WEIGHT TABLE. 34
1.6. SEAT LINERS. ..... 35 to 36
1.7. PROTECTIVE COATINGS ON THE VAMEIN BUTTERFLY VALVES. ..... 38 to 48

The butterfly valve is the most commonly used device for the control of fluids.

The VAMEIN butterfly valve is of such good quality due to the great experience this company has in this field, plus the constant advances and supervision on the quality of the materials, foundry, machining process and testing.

The spectacular progress made in the design and seats have enabled VAMEIN DE ESPAÑA, S.A. to develop and manufacture a whole range of butterfly valves completely watertight which are able to satisfy most of the market needs.

VAMEIN DE ESPAÑA, S.A.
Calle Temple, 1 - 28760 - Tres Cantos
Madrid (ESPAÑA)
Phone. (+34) 91 803 45 17 – Email: comercial@vamein.es

1.1. FEATURES

1.1.1. BUTTERFLY VALVES ADVANTAGES.

In comparison to other valve types, technical and economical advantages can be found in the butterfly valve due to its minimum pressure drop and low torque, although at the same time the ignorance of its particular properties and the great conservatism of users make it not to be used on a large scale. It is necessary to take into consideration that the use of traditional valves, such as gate, ball, piston, globe, etc. is justified for some particular applications.

From an economical point of view, the best valve is the butterfly valve, as the most important manufacturing costs are: raw material, machining, handling and installation. All these factors make the balance tip towards the butterfly valve.

Concentric butterfly valve has also the following special technical properties:

Full watertightness is achieved thanks to a resilient rubber seat liner which gives bi-directional sealing; therefore, joints are unnecessary when assembling between flanges.

Due to the encircling seat liner system covering inside the body of the valve, the fluid only touches the seat liner itself and the disc. This seat has no cavities for the retention of line fluid.

The nature of fluid, pressure, temperature and further factors of the line must be considered on choosing those parts in contact with the fluid. Various seat and disc options ensure valves compatibility to line media.

As the butterfly valve has a weight and assembly dimensions lower than those of other type of valves with the same Nominal Diameter, this makes the transport, handling, assembling, lifting equipment, etc., expenses cheaper. It also needs less room to be located as well as a lower maintenance and/or repair costs.

Conventional valves have a higher pressure drop than butterfly and ball valves. This is why, on calculating a line with several valves, high power is needed to drive the fluid due to the pressure drop; therefore, higher power pumping actuators are needed.

For Nominal Diameters over 600 mm (24") a butterfly valve is necessary, as the remaining valves are generally manufactured with a Nominal Diameter under 300 mm (12"), and those that are manufactured in larger sizes create assembly problems due to their dimensions and weight.

VAMEIN DE ESPAÑA, S.A.
Calle Temple, 1 - 28760 - Tres Cantos
Madrid (ESPAÑA)
Phone. (+34) 91 803 45 17 – Email: comercial@vamein.es

1.1.2. PARTICULAR FEATURES OF THE "VAMEIN" RESILIENT SEATED BUTTERFLY VALVE

The butterfly valve made by **VAMEIN DE ESPAÑA, S.A.** has all the advantages of these types of valves as well as a full warranty for the user as it is manufactured abiding the most strict quality standards set by UNE-EN 9001.

- Low weight.
- Fast assembly and disassembly.
- Minimum pressure drop.
- Easy and safe to use.

It also has the advantages of the exclusive VAMEIN DE ESPAÑA, S.A. design:

- Total and permanent watertightness up to 16 bar.
- No gaskets necessary for installation between flanges.
- Maintenance free.
- Liners easy to replace.
- Due to the Disc - Shaft connection design with no pins, screws or keys and narrow machining tolerances of its components all parts of the valve are interchangeable.
- Extreme low operating torque.
- Possibility to use it as control (regulating) valve.
- Self-cleaning.
- Cavity free.
- Thanks to the centring holes enabling a correct alignment and a fast installation easy to place in the pipeline.
- Enables the use of insulation in heat-resistant installations.
- Quality identification for material: each body, disc and liner is marked with its code number to have a perfect quality traceability of the materials used for their production. Thus with the Heath Number our Quality Assurance Department obtain a perfect traceability of the quality of materials, enabling them to know at any time the chemical composition and mechanical properties.
- Descriptive label indicating: name of manufacturer, valve figure description, maximum working pressure, maximum working temperature, flange standard and country of origin.
- Thermo-contractive polyethylene individual packing up to DN 300 (12”).
- Possibility of EC marking to Pressure Equipment Directive 2014/68/EU, European Directive ATEX 2014/34/EU concerning equipments and protective systems intended for use in potentially explosive atmospheres, and certificates to work with drinking water for human consumption.

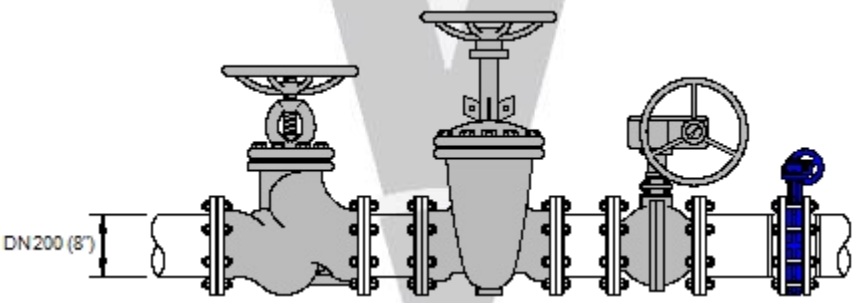

VALVE TYPE	GLOBE	GATE	BALL	BUTTERFLY
APROXIMATE WEIGHT	165 Kg.	145 Kg.	80 Kg.	17 Kg.
FACE TO FACE	600 mm	600 mm	230 mm	60 mm

VAMEIN DE ESPAÑA, S.A.
Calle Temple, 1 - 28760 - Tres Cantos
Madrid (ESPAÑA)
Phone. (+34) 91 803 45 17 – Email: comercial@vamein.es

1.2. APLICATIONS

The **VAMEIN** butterfly valve has many uses in many different fields. The following list contains some of the different types of industries and fluids that our valves are used for.

1.2.1. INDUSTRIES

Air and gas conductors.	Mining
Cement Factories	Nuclear Power Stations
Chemical Industry	Oil Refinery
Combined Cicles	Paper Industry
Dairies	Power Stations
Dams and Water Pumping Stations	Purifying plants
Pharmaceutical Industry	River diversion
Distilleries	Salts
Fire-prevention systems	Sea water desalination
Food industry	Sugar Refineries
Heating and air conditioning.	Vacuum installations
Iron and steel Industry	Water treatment and piping
Irrigation	Wine Industry
Lorry tankers	Etc.

1.2.2. FLUIDOS

Acids	Kerosene
Air	Milk
Beer	Oils and lubricants
Biocombustibles	Oxygen
Concrete and aggregates	Ozone
Chlorine	Paints
Demineralised water	Petroleum and fuels
Drinking water	Raw oil
Fats	Sea water
Fluor	Sewage
Fruit juices	Solvents
Fuels	Water steam
Gases	Wines and spirits
Hydrogen	Etc.

VAMEIN DE ESPAÑA, S.A.
Calle Temple, 1 - 28760 - Tres Cantos
Madrid (ESPAÑA)
Phone. (+34) 91 803 45 17 – Email: comercial@vamein.es

1.3. CONSTRUCTION AND STANDARDS.

The VAMEIN butterfly valve is made up of the following components:

1.3.1. BODY.

- Never in contact with the fluid.
- VAMEIN DE ESPAÑA, S.A. exclusive design enables you to fit the seat easily.

MATERIALS:

- Ductile iron. ASTM A395/A395M-99(2014) Gr. 60-40-18.
- Cast carbon steel ASTM A216-14E1 Gr. WCB.
- Stainless steel A351/A351M-15 Gr. CF8.
- Stainless steel ASTM A351/A351M-15 Gr. CF8M.
- Bronze ASTM B62-15. Alloy UNS Nº C 83600.
- Aluminium Bronze ASTM B148-14. Alloy UNS Nº C 95800.
- Aluminium. Standard EN-1706.
- Other materials available on request: Hastelloy, Monel, Inconel, Titanium, Uranus B-6, etc.

1.3.2. DISC.

- Designed to fit the seat perfectly giving you a watertight valve with low torques.
- Minimum drop pressure.
- DISC-SHAFT drive by means of torsion flats or square, with no pins, keyways, bolts or any other mechanical fixing device seriously complicating the valve disassembly as well as the spare parts replacement since it might be necessary to use special tools an machinery.

MATERIALS:

- Ductile iron. ASTM A395/A395M-99.
- Cast carbon steel ASTM A216-14E1 Gr. WCB.
- Stainless steel A351/A351M-15 Gr. CF8.
- Stainless steel ASTM A351/A351M-15 Gr. CF8M.
- Bronze ASTM B-62. Alloy UNS Nº C 83600.
- Aluminium Bronze ASTM B-148. Alloy UNS Nº C 95800.
- Other materials available on request: Hastelloy, Monel, Inconel, Titanium, Uranus B-6, etc.
  - , Uranus B-6, Inconel, etc.

VAMEIN DE ESPAÑA, S.A.
Calle Temple, 1 - 28760 - Tres Cantos
Madrid (ESPAÑA)
Phone. (+34) 91 803 45 17 – Email: comercial@vamein.es

1.3.3. SHAFT.

- Never in contact with fluid.
- The centred shaft system in relation to the body, plus its design, gives it a high resistance and permanent watertightness.
- From DN-50 mm to DN-300 mm (2" to 12") the shaft is made out of one piece, and from DN-350 mm (14") upwards in two.
- No pins, keyways or bolts going through for easy replacement and max flow.
- The shaft has been made so that it will direct connect with the actuators.

MATERIALS:

- Stainless steel Standard EN-10.088.3:2015 1.4021 from DN-50 mm up to DN-2000 mm. (2" to 80").
- Other materials are available on request: AISI-304, AISI-316, AISI-431, Monel, Hastelloy, Titanium, Uranus B-6, Inconel, etc.

1.3.4. SEAT.

- They are specially designed by VAMEIN DE ESPAÑA, S.A. to allow a perfect fit with the valve body, fully machined and making the valve completely watertight. Furthermore, the seat liner is perfectly positioned in the valve body to ensure minimal operational wear, minimum operation torque and a long life service.
- Its external "O-RINGS" allow a perfect seal with the flanges without requiring any additional joints.
- Shaft It is perfectly watertight due to "O-RINGS" moulded seals to seal the shaft.

MATERIALS:

- Ethylene propylene. EPDM.
- Nitrile (Buna-N).
- Butyl.
- Hypalon.
- Neoprene.
- Viton®.
- Silicone.
- Food natural rubber.
- Antiabrasive natural rubber.
- Others on request.

VAMEIN DE ESPAÑA, S.A.
Calle Temple, 1 - 28760 - Tres Cantos
Madrid (ESPAÑA)
Phone. (+34) 91 803 45 17 – Email: comercial@vamein.es

1.3.5. BUSHING.

- The bushings absorb the lateral pressure applied on the disc by the flow of the fluid and on the shafts by the eccentrically mounted actuators.
- Good sliding properties.
- Low friction coefficient, low wear, long life.
- Hardly any maintenance needed.
- NYLON-6 up to DN-500 mm (20”). (Includes retention ring for shafts).
- Bronze ASTM B-62-15. Alloy UNS Nº C 83600 from DN-600 mm (24").

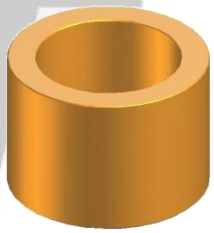

1.3.6. BODY-SHAFT WATERTIGHTNESS SEAL “CHEVRON” TYPE.

- VAMEIN DE ESPAÑA, S.A. exclusive design gives double watertightness, inside and outside the valve and the contact areas between the body and shaft.
- BUNA-N rubber for all manufacture range, other materials are available on request.

1.3.7. SHAFT RETENTION RING.

- This safety ring makes sure that the shaft stays in place, enabling you to replace the actuator without removing the valve from line.
- Nylon-6 bushing-shaft retention ring
- (8-Shaped) from DN-50 through DN-200 (2"-8").
- Nylon-6 bushing-shaft retention ring from DN-250 through DN-500 (10"-20")
- Steel shaft retention ring from DN-600 through DN-2000 (24"-80")

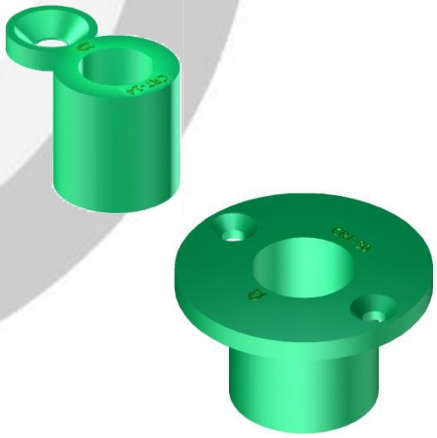

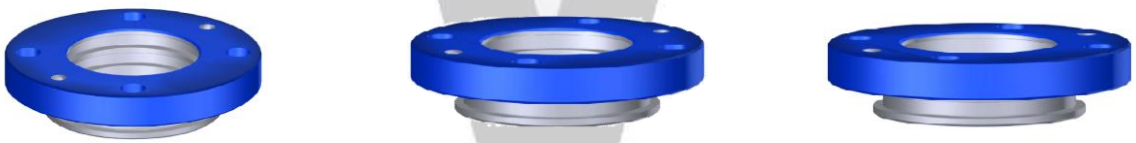

VAMEIN DE ESPAÑA, S.A.
Calle Temple, 1 - 28760 - Tres Cantos
Madrid (ESPAÑA)
Phone. (+34) 91 803 45 17 – Email: comercial@vamein.es

1.3.8. DETAILS OF THE DIFFERENT DESIGNS OF VALVES.

1.3.8.1. VALVE DESIGN FROM DN-50 TO DN-300 (2" TO 12")

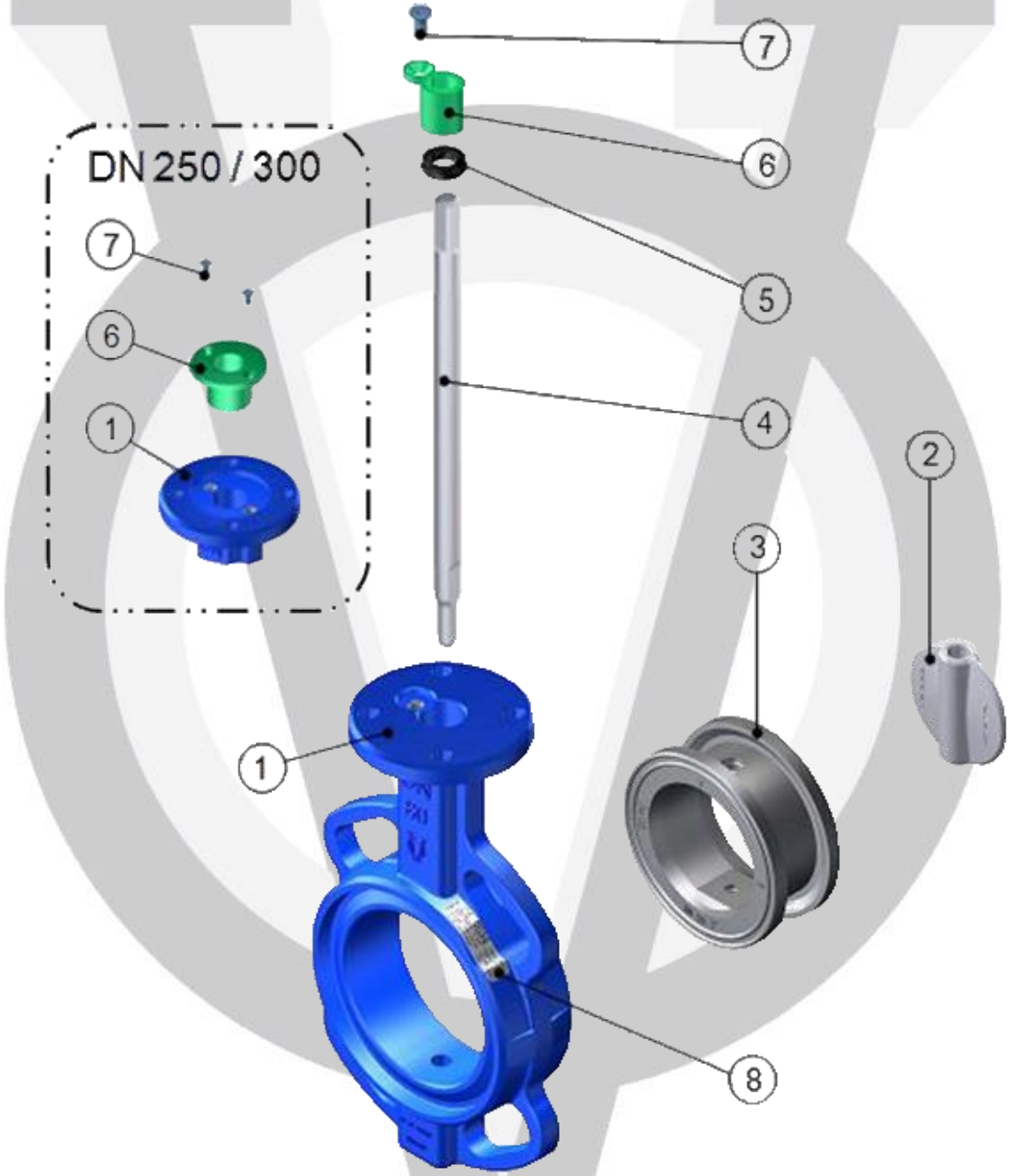

ITEM	DESCRIPTION	MATERIALS	QUANTITY
1	BODY	ON REQUEST	1
2	DISC	ON REQUEST	1
3	SEAT	ON REQUEST	1
4	SHAFT	STAINLESS STEEL	1
5	CHEVRON SEAL	BUNA-N	1
6	RETENTION BUSHING	NYLON-6	1
7	BOLT FOR RETENTION BUSHING (DIN - 7991)	STAINLESS STEEL	(*)
8	LABEL WITH FEATURES	PVC	1

(*) Up to DN-200, quantity 1. For DN-250 and DN-300, quantity 2.

VAMEIN DE ESPAÑA, S.A.
Calle Temple, 1 - 28760 - Tres Cantos
Madrid (ESPAÑA)
Phone. (+34) 91 803 45 17 – Email: comercial@vamein.es

1.3.8.2. VALVE DESIGN FROM DN-350 TO DN-500 (14" TO 20")

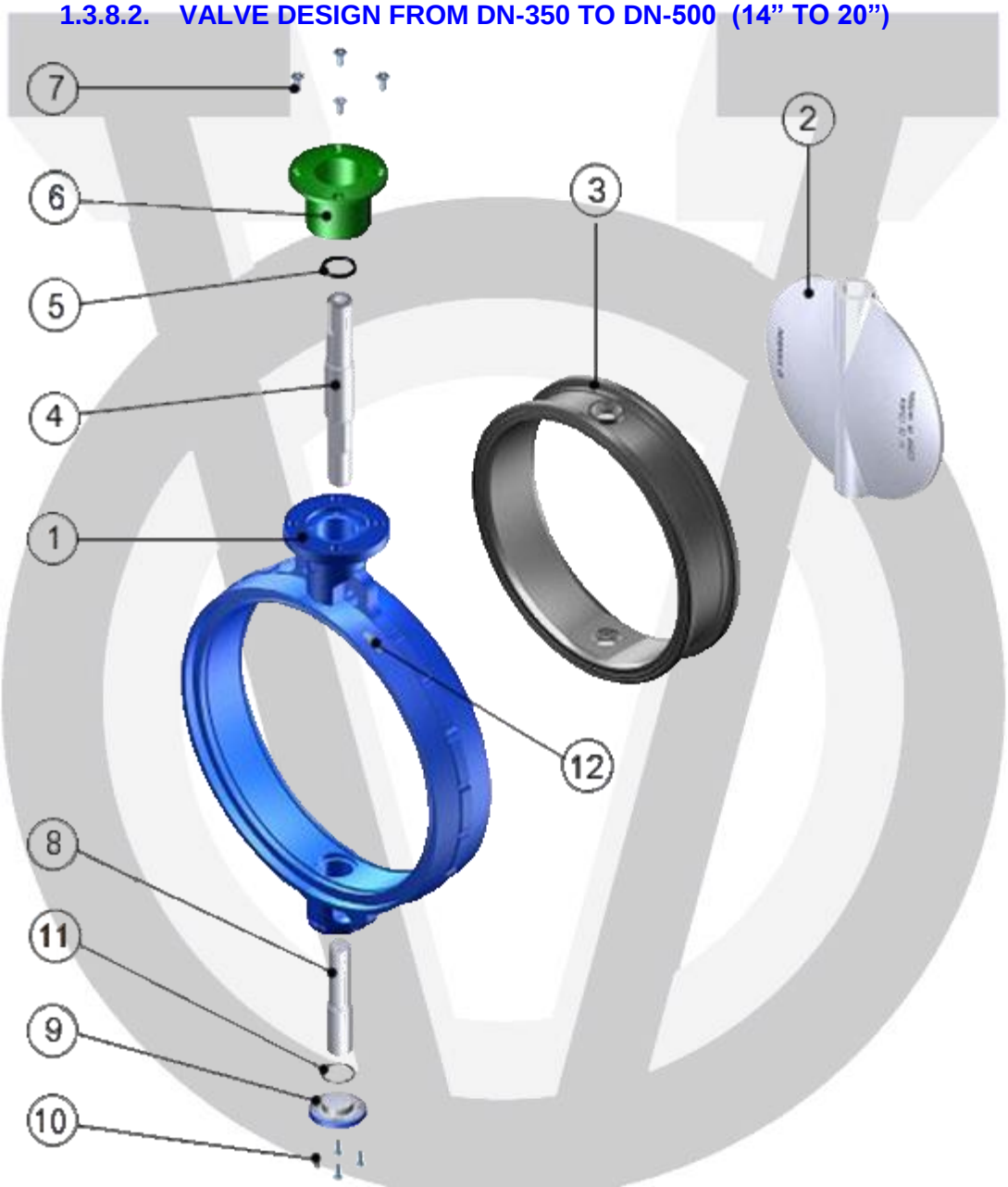

ITEM	DESCRIPTION	MATERIALS	QUANTITY
1	BODY	ON REQUEST	1
2	DISC	ON REQUEST	1
3	SEAT	ON REQUEST	1
4	UPPER SHAFT	STAINLESS STEEL	1
5	CHEVRON SEAL	BUNA-N	1
6	RETENTION BUSHING	NYLON-6	1
7	BOLT FOR RETENTION BUSHING (DIN-	STAINLESS STEEL	4
8	LOWER SHAFT	STAINLESS STEEL	1
9	LOWER COVER	STEEL	1
10	BOLT FOR LOWER COVER (DIN-912)	STAINLESS STEEL	4
11	O-RING	BUNA-N	1
12	LABEL WITH FEATURES	PVC	1

VAMEIN DE ESPAÑA, S.A.
Calle Temple, 1 - 28760 - Tres Cantos
Madrid (ESPAÑA)
Phone. (+34) 91 803 45 17 – Email: comercial@vamein.es

1.3.8.3. VALVE DESIGN DN 600 / 700 / 1200 (24"/28"/48") EN 558. 20 SERIES

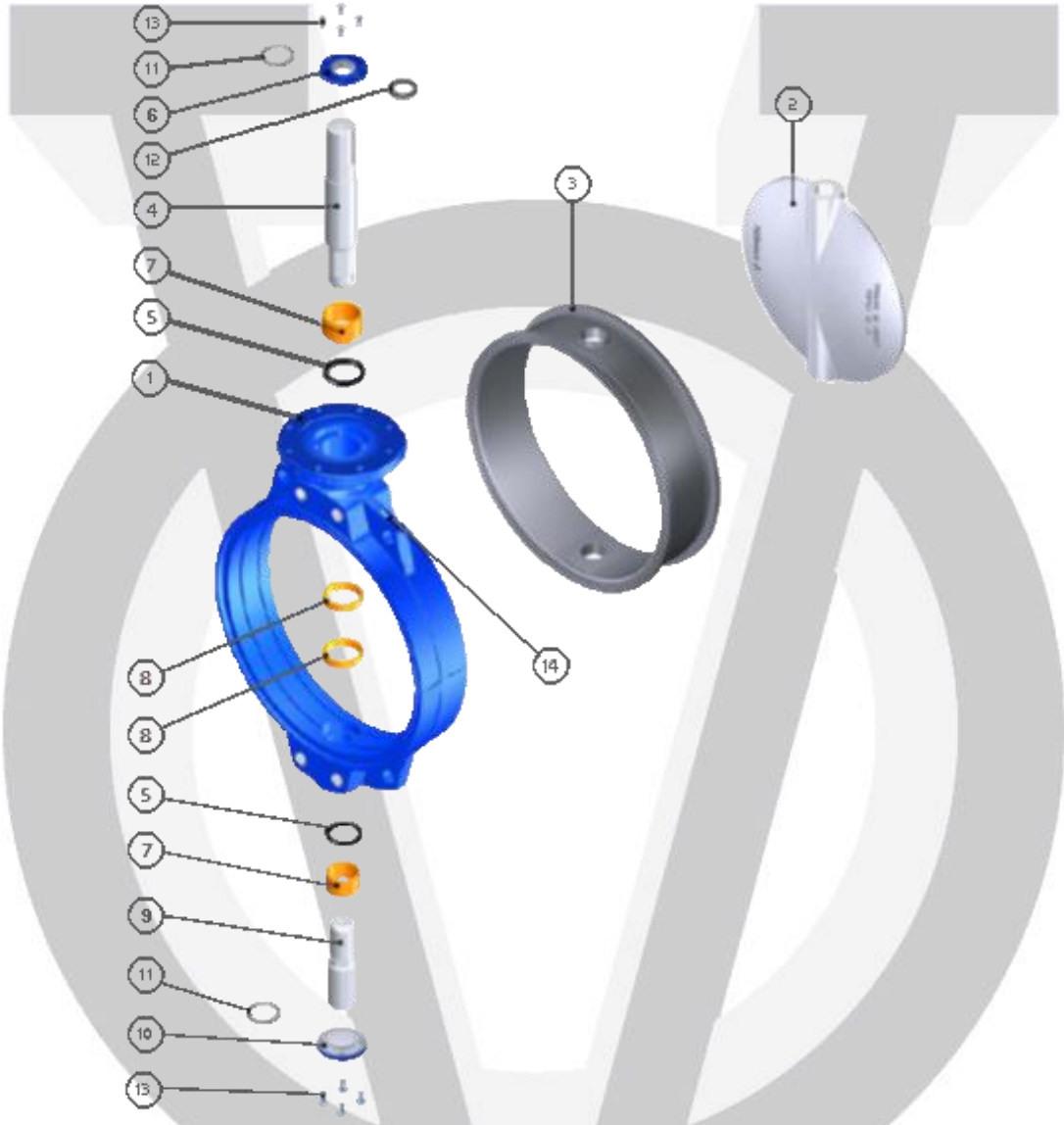

ITEM	DESCRIPTION	MATERIALS	QUANTITY
1	BODY	ON REQUEST	1
2	DISC	ON REQUEST	1
3	SEAT	ON REQUEST	1
4	UPPER SHAFT	STAINLESS STEEL	1
5	CHEVRON SEAL	BUNA-N	2
6	UPPER COVER	STEEL	1
7	LARGE BUSHING	BRONZE	2
8	SMALL BUSHING	BRONZE	2
9	LOWER SHAFT	STAINLESS STEEL	1
10	LOWER COVER	STEEL	1
11	O-RING	BUNA-N	2
12	O-RING	BUNA-N	2
13	COVER BOLTS (DIN-912)	STAINLESS STEEL	8
14	LABEL WITH FEATURES	PVC	1

VAMEIN DE ESPAÑA, S.A.
Calle Temple, 1 - 28760 - Tres Cantos
Madrid (ESPAÑA)
Phone. (+34) 91 803 45 17 – Email: comercial@vamein.es

1.3.8.4. VALVE DESIGN DN-650 / 750 / 800 / 900 / 1000 (26"/ 30"/ 32 / 36"/40")

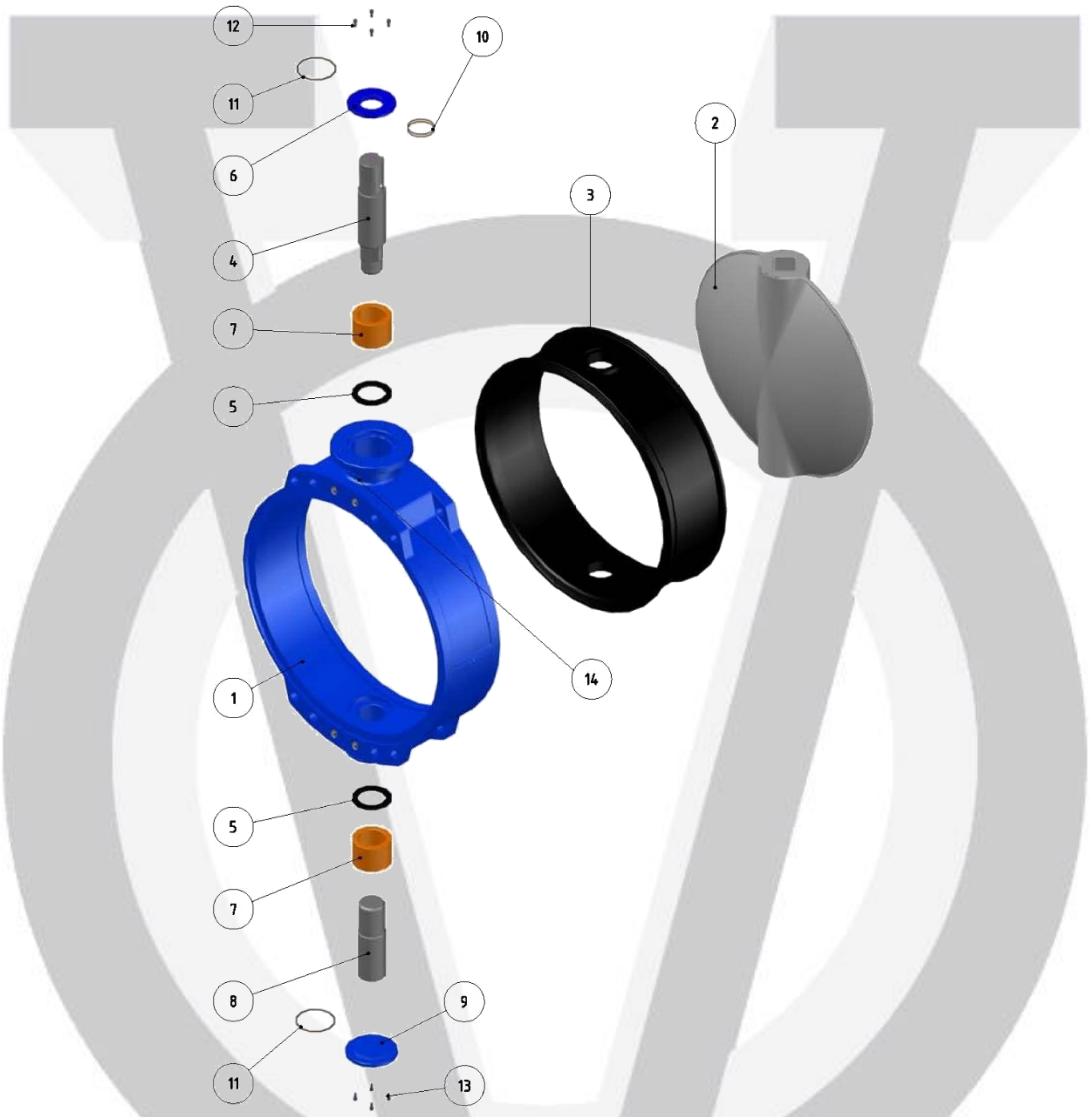

ITEM	DESCRIPTION	MATERIALS	QUANTITY
1	BODY	ON REQUEST	1
2	DISC	ON REQUEST	1
3	SEAT	ON REQUEST	1
4	UPPER SHAFT	STAINLESS STEEL	1
5	CHEVRON SEAL	BUNA-N	2
6	UPPER COVER	STEEL	1
7	BUSHING	BRONZE	2
8	LOWER SHAFT	STAINLESS STEEL	1
9	LOWER COVER	STEEL	1
10	O-RING	BUNA-N	2
11	O-RING	BUNA-N	2
12	BOLT FOR UPPER COVER (DIN-912)	STAINLESS STEEL	4
13	BOLT FOR LOWER COVER (DIN-912)	STAINLESS STEEL	4
14	LABEL WITH FEATURES	PVC	1

VAMEIN DE ESPAÑA, S.A.
Calle Temple, 1 - 28760 - Tres Cantos
Madrid (ESPAÑA)
Phone. (+34) 91 803 45 17 – Email: comercial@vamein.es

1.3.9. APLICABLE REGULATIONS

- CONCERNING QUALITY SYSTEM	
CODE	**TITLE**
UNE-EN-ISO 9001	Quality management systems. Requirements.
- CONCERNING CERTIFICATIONS / APPROVALS	
PED 2014/68/EU	European Directive concerning pressure equipment.
ATEX 2014/34/EU	European Directive concerning equipments and protective systems intended for use in potentially explosive atmospheres.
DVGW	Certificate for drinking water (DVGW type examination certificate)
- CONCERNING DESIGN	
CODE	**TITLE**
UNE EN-593:2009 + A1:2001	Industrial valves. Metallic butterfly valves.
API 609-09	Butterfly Valves: Double Flanged, Lug-and Wafer-Type.
MSS SP-67-11	Butterfly valves.
ASME B16.24-11	Cast copper alloy pipe flanges and flanged fittings.
ASME B16.34-13	Valves-Flanged, threaded, and welding end.
ASME B16.42-11	Ductile Iron pipe flanges and flanged fittings.
EN 12516-1:2005	Industrial Valves - Mechanical resistance of the enclosure. Part 1: Tabulation method for steel valve enclosures
EN 12516-4:2009	Industrial Valves - Mechanical resistance of the enclosure. Part 1: Calculation method for valve enclosures of materials other than steel
- CONCERNING ASSEMBLY BETWEEN FLANGES	
CODE	**TITLE**
EN 1092-1:2008 + A1:2005	Flanges and their joints. Circular flanges for pipes, valves, fittings and accessories, PN designated. Part I: Steel flanges.
EN 1092-2:1998	Flanges and their joints. Circular flanges for pipes, valves, fittings and accessories, PN designated Part 2: Cast iron flanges.
ASME B16.5-13	Pipe flanges and flanged fittings: NPS ½ through NPS 24. (DN 15 through DN 600)
ASME B16.1	Cast iron pipe flanges and flanged fittings classes 25, 125, and 250.
ASME B16.47-11	Large diameter steel flanges NPS 26 through NPS 60. (DN 650 through DN 1500)
- CONCERNING PRODUCTION - ACTUATOR ATTACHMENTS.	
CODE	**TITLE**
UNE-EN-ISO 5211-01	Industrial valves. Part-turn actuator attachments.
DN-50 a 300 mm. (2" a 12") • Standard Vamein dimensions with parallel square to 0º (two faces of square parallel to the disc) with dimensions to UNE-EN-ISO 5211 and DIN 79 standards. • Optionally, with diagonal square to 45º (vertexes of the square in line with the disc) with dimensions to UNE-EN-ISO 5211 and DIN 79 standards. N.B.:From DN-50 to 200mm, the central groove on the top flange, as per UNE-EN-ISO 5211, is special construction.	
DN-350 a 1200mm. (14" a 48"): • Standard Vamein dimension with key-way shaft end to ISO/R 773. • Optionally, with parallel or diagonal square with dimensions to UNE-EN-ISO 5211 and DIN 79 standards.	
- CONCERNING PRODUCTION - FACE TO FACE FROM DN-50 TO DN-500 (2" – 20") & DN 600 / 700 / 1200 (24"/28"/48")	
CODE	**TITLE**
UNE-EN 558-08+A1:2012	Industrial valves. Face-to-face and centre-to-face dimensions of metal valves for use in flanged pipe systems. -PN and Class designated valves.
ISO 5752-82	Metal valves for use in flanged pipe systems – Face-to-face and centre-to-face dimensions.
- CONCERNING PRODUCTION - FACE TO FACE DN-650 / 750 / 800 / 900 / 1000 (26" / 30" / 32" / 36"/40")	
CODE	**TITLE**
VAMEIN	Standard manufacture
- CONCERNING TESTING	
CODE	**TITLE**
ISO 5208-2015	Technical delivery conditions for valves. Compilation of test methods.
- CONCERNING MARKING AND LABELLING	
CODE	**TITLE**
UNE-EN 19-02	Marking of general purpose industrial valves.
CONCERNING MATERIAL AND TEST CERTIFICATES	
CODE	**TITLE**
EN 10204:2006	2.2 / 3.1

VAMEIN DE ESPAÑA, S.A.
Calle Temple, 1 - 28760 - Tres Cantos
Madrid (ESPAÑA)
Phone. (+34) 91 803 45 17 – Email: comercial@vamein.es

1.4. STANDARD MATERIALS FOR THE VAMEIN RESILIENT SEATED BUTTERFLY VALVES.

1.4.1. DUCTILE IRON. ASTM A395/A395M-99 GRADE 60-40-18 DUCTILE IRON. STANDARD EN-1563. GRADE EN-JS1020

Cast iron with sphere shaped graphite suitable for high temperatures. It has high tensile strength. Due to its good mechanical properties it is starting to replace carbon steel in many applications.

CHEMICAL COMPOSITION		
COMPONENT	%	
	ASTM	EN
C	⩾3,00	*
Mn	N/A	*
Si	⩽ 2,50	*
S	N/A	*
P	⩽ 0,08	*

MECHANICAL FEATURES				
FEATURES	SYMBOL	VALUE		UNIT
		ASTM	EN	
TENSILE STRENGTH	Rm	⩾ 415	⩾ 400	N/mm²
YIELD POINT	Rp	⩾ 275	⩾ 250	N/mm²
ELONGATION	A	⩾ 18	⩾ 18	%
HARDNESS	HB	143-187	N/A	Brinell
AREA REDUCTION	Z	N/A	N/A	%

* As per foundry criterium.

MACROGRAPHY

USE: Bodies and discs.

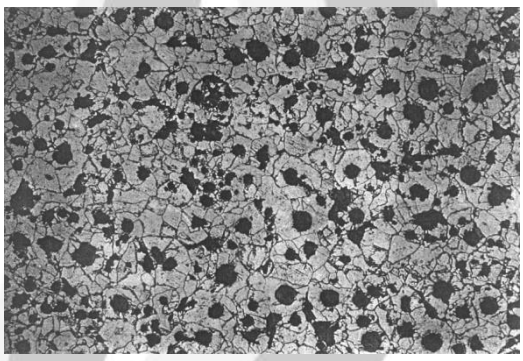

1.4.2. ACERO AL CARBONO ASTM A216/A216M-14E1 Gr. WCB. ACERO AL CARBONO 1.0619 EN 10213-2.

Carbon steel is mainly used in the industrial and chemical sector, and it is recommended when dealing with high temperatures as it has very good mechanical properties.

CHEMICAL COMPOSITION	
COMPONENT	%
C	⩽ 0,3
Mn	⩽ 1,0
Si	⩽ 0,6
S	⩽ 0,045
P	⩽ 0,04

MECHANICAL FEATURES				
FEATURES	STANDARD	SYMBOL	VALUE	UNIT
TENSILE STRENGTH	ASTM	Rm	485-655	N/mm²
YIELD POINT	ASTM	Rp	⩾ 250	N/mm²
ELONGATION	ASTM	A	⩾ 22	%
HARDNESS	ASTM	HB		Brinell
AREA REDUCTION	ASTM	Z	⩾ 35	%

USE: Bodies and discs.

VAMEIN DE ESPAÑA, S.A.
Calle Temple, 1 - 28760 - Tres Cantos
Madrid (ESPAÑA)
Phone. (+34) 91 803 45 17 – Email: comercial@vamein.es

1.4.3. ACERO INOXIDABLE FUNDIDO ASTM A351/A351M-15 Gr. CF8. ACERO INOXIDABLE FUNDIDO 1.4308 EN 10213-4

Low carbon non magnetic stainless steel. It can resist 400 ° C.

CHEMICAL COMPOSITION	
COMPONENT	%
C	⩽ 0,08
Cr	18-21
Ni	8-11
Mn	⩽ 1,5
Si	⩽ 2
P	⩽ 0,04
S	⩽ 0,04
Mo	⩽ 0,5

MECHANICAL FEATURES				
FEATURES	STANDARD	SYMBOL	VALUE	UNIT
TENSILE STRENGTH	ASTM	Rm	⩾ 485	N/mm^2
YIELD POINT	ASTM	Rp	⩾ 205	N/mm^2
ELONGATION	ASTM	A	⩾ 35	%
HARDNESS	ASTM	HB		Brinell
AREA REDUCTION	ASTM	Z		%

USE: Bodies and discs.

1.4.4. CAST STAINLESS STEEL ASTM A351/A351M-15 Gr. CF8M. CAST STAINLESS STEEL 1.4408 EN 10213-4

Low carbon non magnetic stainless steel. Ideal for the food industry as it is very resistant to corrosion.

CHEMICAL COMPOSITION	
COMPONENT	%
C	⩽ 0,08
Cr	18-21
Ni	9-12
Mn	⩽ 1,5
Si	⩽ 1,5
P	⩽ 0,04
S	⩽ 0,04
Mo	2-3

MECHANICAL FEATURES				
FEATURES	STANDARD	SYMBOL	VALUE	UNIT
TENSILE STRENGTH	ASTM	Rm	⩾ 485	N/mm^2
YIELD POINT	ASTM	Rp	⩾ 205	N/mm^2
ELONGATION	ASTM	A	⩾ 30	%
HARDNESS	ASTM	HB		Brinell
AREA REDUCTION	ASTM	Z		%

USE: Bodies and discs.

1.4.5. BRONZE ASTM B-62. ALLOY UNS Nº C 83600. BRONZE CC491K EN1982

Copper, Zinc, tin and lead alloys are also known as 85-5-5-5 which are sea water resistant, making it very useful for steam services.

CHEMICAL COMPOSITION	
COMPONENT	%
Cu	84-86
Sn	4-6
Zn	4-6
Pb	4-6
Ni	⩽ 1

MECHANICAL FEATURES				
FEATURES	STANDARD	SYMBOL	VALUE	UNIT
TENSILE STRENGTH	ASTM	Rm	⩾ 205	N/mm^2
YIELD POINT	ASTM	Rp	⩾ 95	N/mm^2
ELONGATION	ASTM	A	⩾ 20	%
HARDNESS	ASTM	HB		Brinell
AREA REDUCTION	ASTM	Z		%

USE: Bodies, Discs, Bearings and internal parts of actuators.

VAMEIN DE ESPAÑA, S.A.
Calle Temple, 1 - 28760 - Tres Cantos
Madrid (ESPAÑA)
Phone. (+34) 91 803 45 17 – Email: comercial@vamein.es

1.4.6. ALUMINIUM BRONZE. ASTM B148-14. ALEACIÓN UNS Nº C 95800. ALUMINIUM BRONZE EN 1982 CC333G

Monophase Aluminium Bronze has good resistance against atmospheric corrosion and sea water. Very good when used in marine and vapour lines and off shore platforms.

CHEMICAL COMPOSITION	
COMPONENT	%
Cu	Resto
Fe	3,5-4,5
Al	8,5-9,5
Mn	0,8-1,5
Ni	4-5
Si	⩽ 0,10
Pb	⩽ 0,03

MECHANICAL FEATURES				
FEATURES	STANDARD	SYMBOL	VALUE	UNIT
TENSILE STRENGTH	ASTM	Rm	⩾ 585	N/mm^2
YIELD POINT	ASTM	Rp	⩾ 240	N/mm^2
ELONGATION	ASTM	A	⩾ 15	%
HARDNESS	ASTM	HB		Brinell
AREA REDUCTION	ASTM	Z		%

USE: Bodies and discs.

1.4.7. ALUMINIUM ALLOY. STANDARD EN-1706:2011. (APROX: ALUMINIUM ALLOY. ASTM B 179 333.1)

NUMERICAL DENOMINATION : EN AC-46000
SYMBOLICAL DENOMINATION: EN AC-Al Si9Cu3(Fe)

Aluminium weighs 3 times less than iron does and has a high resistance to corrosion. This is why **VAMEIN DE ESPAÑA, S.A.** uses aluminium to make the bodies for butterfly valves and gearbox frames.

VAMEIN DE ESPAÑA, S.A. has a high production level for a specific butterfly valve pattern with the body made in aluminium ranging from DN-50 mm (2") to DN-300 mm (12") enabling us to offer competitive prices.

CHEMICAL COMPOSITION	
COMPONENT	%
Si	8.0-11.0
Fe	⩽ 1.30
Cu	2.0-4.0
Mn	⩽ 0,55
Mg	0.05-0.55
Cr	⩽ 0,15
Ni	⩽ 0,55
Zn	⩽ 1.20
Pb	⩽ 0,35
Sn	⩽ 0,15
Ti	⩽ 0,25

MECHANICAL FEATURES				
FEATURES	STANDARD	SYMBOL	VALUE	UNIT
TENSILE STRENGTH	EN	Rm	⩾240	N/mm^2
YIELD POINT	EN	Rp	⩾140	N/mm^2
ELONGATION	EN	A	<1	%
HARDNESS	EN	HB	⩾80	Brinell
AREA REDUCTION	EN	Z	--	%

USE: Bodies and several types actuator.

VAMEIN DE ESPAÑA, S.A.
Calle Temple, 1 - 28760 - Tres Cantos
Madrid (ESPAÑA)
Phone. (+34) 91 803 45 17 – Email: comercial@vamein.es

1.4.8. LAMINATED STAINLESS STEEL ASTM A276/A276M-16. TYPE 304.
(APROX: LAMINATED STAINLESS STEEL 1.4301 EN 10088-3)

Low carbon austenitic stainless steel has a high resistance against: atmospheric agents, acid corrosion, and also has mechanical resistance to high temperatures although the maximum working temperature is 780 ° C as a skin is formed at higher temperatures.

CHEMICAL COMPOSITION	
COMPONENT	%
C	⩽ 0,08
Cr	18-20
Ni	8-10,5
Mn	⩽ 2
Si	⩽ 1
P	⩽ 0,045
S	⩽ 0,030

MECHANICAL FEATURES				
FEATURES	STANDARD	SYMBOL	VALUE	UNIT
TENSILE STRENGTH	ASTM	Rm	⩾ 515	N/mm^2
YIELD POINT	ASTM	Rp	⩾ 205	N/mm^2
ELONGATION	ASTM	A	⩾ 40	%
HARDNESS	ASTM	HB		Brinell
AREA REDUCTION	ASTM	Z	⩾ 50	%

USE: Shafts.

1.4.9. LAMINATED STAINLESS STEEL ASTM A276/A276M-16. TYPE 316.
(APROX: LAMINATED STAINLESS STEEL 1.4401 EN 10088-3)

Low carbon austenitic stainless steel. Ideal for the food industry, dairy products, oils, etc. Excellent to work with different acids. (acetic, citric, lactic, nitric, etc.).

CHEMICAL COMPOSITION	
COMPONENT	%
C	⩽ 0,08
Cr	16-18
Ni	10-14
Mn	⩽ 2
Si	⩽ 1
P	⩽ 0,045
S	⩽ 0,030
Mo	2-3

MECHANICAL FEATURES				
FEATURES	STANDARD	SYMBOL	VALUE	UNIT
TENSILE STRENGTH	ASTM	Rm	⩾ 515	N/mm^2
YIELD POINT	ASTM	Rp	⩾ 205	N/mm^2
ELONGATION	ASTM	A	⩾ 40	%
HARDNESS	ASTM	HB		Brinell
AREA REDUCTION	ASTM	Z	⩾ 50	%

USE: Shafts.

1.4.10. LAMINATED STAINLESS STEEL ASTM A276/A276M-16. TYPE 420.
(APROX: LAMINATED STAINLESS STEEL 1.4021 EN 10088-3)

Processed martensitic stainless steel.

CHEMICAL COMPOSITION	
COMPONENT	%
C	⩽ 0,15
Cr	12-14
Mn	⩽ 1
Si	⩽ 1
P	⩽ 0,04
S	⩽ 0,03

MECHANICAL FEATURES				
FEATURES	STANDARD	SYMBOL	VALUE	UNIT
TENSILE STRENGTH	ASTM	Rm		N/mm^2
YIELD POINT	ASTM	Rp		N/mm^2
ELONGATION	ASTM	A		%
HARDNESS	ASTM	HB	⩾ 241	Brinell
AREA REDUCTION	ASTM	Z		%

USE: Shafts.

VAMEIN DE ESPAÑA, S.A.
Calle Temple, 1 - 28760 - Tres Cantos
Madrid (ESPAÑA)
Phone. (+34) 91 803 45 17 – Email: comercial@vamein.es

1.4.11. STAINLESS STEEL. STANDARD EN-10088-3:2015

NUMERICAL DENOMINATION : 1.4021
SYMBOLICAL DENOMINATION: X 20 Cr 13

Processed martensitic stainless steel.

CHEMICAL COMPOSITION	
COMPONENT	**%**
C	0,16-0,25
Cr	12-14
Mn	⩽ 1,5
Si	⩽ 1
P	⩽ 0,04
S	⩽ 0,03

MECHANICAL FEATURES				
FEATURES	**STANDARD**	**SYMBOL**	**VALUE**	**UNIT**
TENSILE STRENGTH	EN	Rm	800-950	N/mm^2
YIELD POINT	EN	Rp	⩾ 600	N/mm^2
ELONGATION	EN	A	⩾ 12	%
HARDNESS	EN	HB		Brinell
AREA REDUCTION	EN	Z		%

USE: Shafts.

1.4.12. OTHER MATERIALS.

VAMEIN DE ESPAÑA, S.A. manufactures on request butterfly valves in the following materials:

- MONEL.
- INCONEL.
- HASTELLOY.
- TITANIUM.
- URANUS B-6.
- NI-RESIST ALLOYED STEELS, etc.

For any special order do not hesitate to ask our Technical Department.

VAMEIN DE ESPAÑA, S.A.
Calle Temple, 1 - 28760 - Tres Cantos
Madrid (ESPAÑA)
Phone. (+34) 91 803 45 17 – Email: comercial@vamein.es
www.vamein.com

1.4.13. CORRESPONDENCE CHART OF THE MOST USUAL MATERIALS FOR BODIES, DISCS AND SHAFTS

MATERIAL TYPE	DENOMINATION DIN		DENOMINATION UNE		DENOMINATION ASTM		DENOMINATION EN	
DENOMINATION	STANDARD	SYMBOL	STANDARD	NUMBER	STANDARD	NUMBER	STANDARD	NUMBER
DUCTILE IRON	1693 (1)	GGG-40	36 118 (1)	FGE 42-12	A 395	A 395	1563	JS-1020
CAST STEEL	17245 (1)	GS-C25	EN-10213	10.619	A 216	WCB	10213-2	1.0619
STAINLESS STEEL (C)	17445 (1)	X6CrNi	-	-	A 351	CF8	10213-4	1.4308
STAINLESS STEEL (C)	17445 (1)	X6CrNiMo	36 257 (1)	F-8414	A 351	CF8M	10213-4	1.4408
BRONZE (C)	1705 (1)	CuSnZnPb	37 103-2	C-3520	B 62	C83600	1982	CC491K
ALUMINIUM BRONZE (C)	1714 (1)	CuAl10Ni	37 103-2	C-4220	B148	C95800	1982	CC333G
ALUMINIUM (C)	1725 (1)	G AlSi 12	38 252 (1)	L-2520	B 179	S 12 C	1706	AC44100
STAINLESS STEEL (L)	17440 (1)	X5CrNi	36016-1(1)	F-3504	A 276	304	10088-3	1.4301
STAINLESS STEEL (L)	17440 (1)	X5CrNiMo	36016-1(1)	F-3534	A 276	316	10088-3	1.4401
STAINLESS STEEL (L)	17440 (1)	X20Cr13	36016-1(1)	F-3402	A 276	420	10088-3	1.4021

(C)- Cast materials.

(L) - Laminated materials.

(1) - Standard cancelled and replaced by the relevant European Standard (EN), therefore the symbolic and numerical denomination charges to be as indicated in the European Standard (EN)

VAMEIN DE ESPAÑA, S.A.
Calle Temple, 1 - 28760 - Tres Cantos
Madrid (ESPAÑA)
Phone. (+34) 91 803 45 17 – Email: comercial@vamein.es

1.5. WEIGHT TABLE.

WEIGHT TABLE IN Kg FOR "VAMEIN" BUTTERFLY VALVES

DN		WAFER				WAFER LIGHT				FLANGED				LUG			
mm	Inch	BARE SHAFT	LEVER	GEAR BOX CAST IRON	GEAR BOX ALUMINUM	BARE SHAFT	LEVER	GEAR BOX CAST IRON	GEAR BOX ALUMINUM	BARE SHAFT	LEVER	GEAR BOX CAST IRON	GEAR BOX ALUMINUM	BARE SHAFT	LEVER	GEAR BOX CAST IRON	GEAR BOX ALUMINUM
50	2”	3,3	4,0	5,8	4,5	1,2	1,9	3,7	2,4					3,2	3,9	5,7	4,4
65	2 ½”	4	4,7	6,5	5,2	1,5	2,2	4	2,7					4,3	5	6,8	5,5
80	3”	4,3	5	6,8	5,5	1,7	2,4	4,2	2,9					6	6,7	8,5	7,2
100	4”	5,7	6,4	8,2	6,9	2,3	3	4,8	3,5	10,3	11	12,8	11,5	8	8,7	10,5	9,2
125	5”	7,4	8,2	9,9	8,6	3,5	4,3	6	4,7	13,6	14,4	16,1	14,8	9,8	10,6	12,3	11
150	6”	8,9	9,7	12,9	10,7	4,7	5,5	8,7	6,5	17,3	18,1	21,3	19,1	11,5	12,3	15,5	13,3
200	8”	13,5	14,3	17,5	15,3	7,0	7,8	11	8,8	22,5	23,3	26,5	24,3	18,3	19,1	22,3	20,1
250	10”	22,8	25,2	27,3	25,9	14,3	16,7	18,8	17,4	38,8	41,2	43,3	41,9	31,5	33,9	36	34,6
300	12”	31,7	34,1	36,2	34,8	19,8	22,2	24,3	22,9	50,3	52,7	54,8	53,4	48,3	50,7	52,8	51,4
350	14”	43,2		53,9						66,7		77,4		57,6		68,3	
400	16”	65,2		81,2						98,7		115		93,1		109,5	
450	18”	84,5		110						128,6		154		114,1		139,3	
500	20”	119		144						171,1		196		158,3		183,5	
600	24”	231		274						277		320		282		325	
650	26”	250		293						338		381					
700	28”	260		303						330		373					
750	30”	386		429						455		498					
800	32”	516		559						632		675					
900	36”	627		695						783		851					
1000	40”	829		897						990		1058					
1050	42”	1034		1103						1364		1433					
1100	44”	1150		1219						1690		1759					
1200	48”	943		1082						1167		1307					
1300	52”	2075		2215						2170		2310					
1400	56”	2235		2375						2340		2480					
1500	60”	2480		2704						2600		2824					
1600	64”	2655		2879						2893		3117					
1800	72”	3025		3249						3633		3857					
2000	80”	3470		3694						3914		4138					

VAMEIN DE ESPAÑA, S.A.
Calle Temple, 1 - 28760 - Tres Cantos
Madrid (ESPAÑA)
Phone. (+34) 91 803 45 17 – Email: comercial@vamein.es

1.6. SEAT LINERS.

1.6.1. FEATURES

They are specially designed by **VAMEIN DE ESPAÑA, S.A.** to allow a perfect fit with the valve's body and making it completely watertight. Their O-RINGS allows a perfect seal with the flanges without requiring any additional joints.

For the valve life and perfect working it is imperative that the right seat material is chosen for the line conditions, i.e., temperature and chemical composition of fluid.

VAMEIN DE ESPAÑA, S.A. Technical Department is prepared to help you choose the right kind of seat. Do not hesitate to ask about the particular conditions of the fluid to be used.

N.B: Some advice is given on the selection of discs and seats in **CHAPTER IV.**

DETAILED WAYS ON FITTING THE SEAT TO THE BODY
AND SHAFT PITCH DETAILS THROUGH THE SEAT.

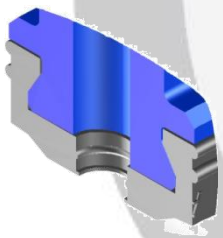

DN 50 - 300

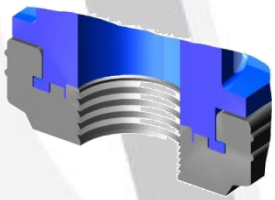

DN 350 - 500

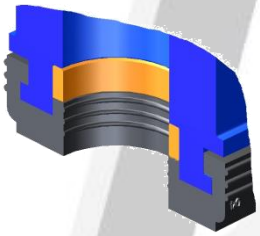

DN 600/700/1200

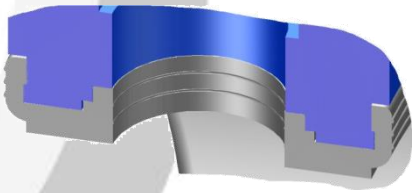

DN 650/750/800/900/1000

Shaft It is perfectly watertight due to "O-RINGS" moulded seals to seal the shaft.

1.6.2. MATERIALS.

Here are the basic ways in which the most common seats behave in technical terms at an informative level.

The following values are used for the most common seat standard formulation, although depending on the fluid used, **VAMEIN DE ESPAÑA, S.A.** has special formulations to make the same basic seat resist more heat and expansion volume than those specified below. For further information, contact our Technical Department.

VAMEIN DE ESPAÑA, S.A.
Calle Temple, 1 - 28760 - Tres Cantos
Madrid (ESPAÑA)
Phone. (+34) 91 803 45 17 – Email: comercial@vamein.es
www.vamein.com

1.6.3. MAIN FEATURES OF THE MOST COMMON SEATS.

1.6.3.1. EPDM.-

CHEMICAL DENOMINATION: ETHYLENE-PROPYLENE RUBBER.
Very good resistance to outdoor weather, the ozone and heat.
Good resistance against water vapour, acid, bases, animal and vegetable grease and oxygen solvents. (Ketone, etc)
Poor resistance against bare flame, aliphatic and aromatic hydrocarbons.
Not usable when in contact with petrol, oil, grease and carbohydrate solvents.

1.6.3.2. NITRILE.- (BUNA-N)

CHEMICAL DENOMINATION: BUTADIENE-ACRILONITRILE RUBBER.
Very good resistance to aliphatic hydrocarbons and vegetable and animal fats.
Good resistance against diluted acids.
Poor resistance against oxygen and halogen solvents.
Not usable when in contact with aromatic hydrocarbons (benzene, toluene, xylene, etc.); or chlorated hydrocarbons (chloroform, trichloroethylene, etc).

1.6.3.3. HYPALON.-

CHEMICAL DENOMINATION: CHLOROSULPHONATED POLYETHYLENE RUBBER.
Very good resistance to outdoor weather, the ozone, diluted acids, alkali and heat.
Good resistance to water concentrated acids, animal and vegetable fat and oil.
Poor resistance to aliphatic and aromatic hydrocarbons.
Not usable when in contact with halogen or oxygen solvents.

1.6.3.4. VITON®.-

CHEMICAL DENOMINATION: FLUORCARBONATED RUBBER.
Very good resistance to heat, outdoor weather, the ozone, water, diluted and concentrated acids, aliphatic and aromatic hydrocarbons, vegetable and animal fats.
Good resistance to halogen solvents.
Not usable when in contact with oxygen solvents

1.6.3.5. SILICONE.-

CHEMICAL DENOMINATION: POLYXILOXANE RUBBER.
Very good resistance to heat, outdoor weather and the ozone.
Poor resistance to diluted and concentrated acids, alkali, oxygen solvents and vegetable and animal fats.
Not usable when in contact with aliphatic and aromatic hydrocarbons.

1.6.3.6. NEOPRENE.-

CHEMICAL DENOMINATION: POLYCHLOROPRENE RUBBER.
Good resistance to heat, outdoor weather, the ozone, concentrated and diluted acids, vegetable and animal fats, and aliphatic hydrocarbons.
Poor resistance to aromatic hydrocarbons, halogen and oxygen solvents.

N.B.: AUTOEXTINGUISHABLE seats can be manufactured with the above types of rubber.

VAMEIN DE ESPAÑA, S.A.
Calle Temple, 1 - 28760 - Tres Cantos
Madrid (ESPAÑA)
Phone. (+34) 91 803 45 17 – Email: comercial@vamein.es
www.vamein.com

1.6.4. TABLE OF TEMPERATURES.

PARAGRAPH	MATERIAL	VAMEIN CODE	COMERCIAL CODE	° C MINIMUN TEMPERATURE	° C MAXIMUN TEMPERATURE
1.6.3.1.	EPDM	E	EPDM	-15	100 (110)
1.6.3.1.	EPDM HIGH TEMPERATURE	EC	EPDM HT	-15	120 (130)
1.6.3.2.	NITRILE	N	NBR	-15	100 (115)
1.6.3.3.	HYPALON	H	CSM	-15	105 (115)
1.6.3.4.	VITÓN®	V	FKM	-20	180 (200)
1.6.3.5.	SILICONE	S	VMQ	-40	180 (200)
1.6.3.6.	NEOPRENE	Ne	Cr	-25	100 (115)

N.B.: There are two possible maximum temperatures, depending if the temperature applied is constant or intermittent. Those shown in brackets refer to the intermittent temperature.
It is to be taken into account that the more the working temperature approaches the limit temperature of the liner, the more premature ageing will take place and its original qualities reduced more quickly.
Temperatures just as information.

1.6.5. RESISTANCE TO DRY HEAT TABLE SHOWN IN °C AND MAXIMUM PERCENTAGE OF VOLUME CHANGE AFTER BEING IMMERSED IN (ACCORDING TO ASTM -D 2000 / SAE J 200 STANDARDS).

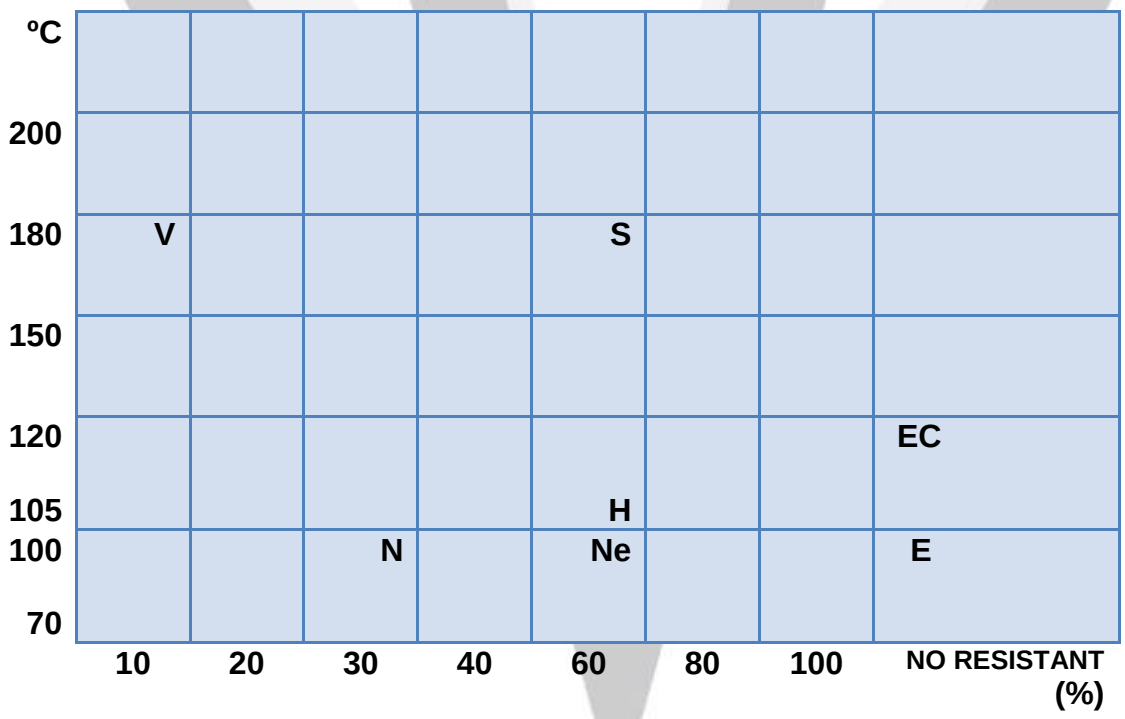

VAMEIN DE ESPAÑA, S.A.
Calle Temple, 1 - 28760 - Tres Cantos
Madrid (ESPAÑA)
Phone. (+34) 91 803 45 17 – Email: comercial@vamein.es
www.vamein.com

1.7. PROTECTIVE COATINGS ON THE VAMEIN BUTTERFLY VALVES.

The standard finishes on **VAMEIN** butterfly valves protect the valve from the fluid that will be run through it and from the atmosphere it will be exposed to.

Before all the parts of the valve are painted, either through RILSAN® or kataphoresis, they are blasted to cleaning grade Sa 2 ½ of SIS 05.59.00 standards, to ensure good adherence of the coating.

1.7.1. BODIES.

Ductile iron and carbon steel valve bodies from DN-50mm. (2”) to DN-300mm. (12”) are coated with RILSAN®, blue colour polyamide B-11 (RAL 5010 approx.), with an approximate thickness of 250 µ. It is also possible for bodies DN-350mm. (14”) and above on request.

From DN-350 mm (14") and above, the body is covered with a Zinc Phosphate epoxy-priming coat plus other finish epoxy enamel coat with two-component (3:1) blue colour (RAL 5017 approx.) and approximate thickness between 80 and 100 µ.

1.7.2. DISCS.

Ductile iron and carbon steel valve discs from DN-50mm. (2”) to DN-300mm. (12”) are coated with RILSAN®, black colour polyamide B-11 (RAL 9011 approx.), with an approximate thickness of 250 µ. It is also possible for discs DN-350mm. (14”) and above on request.

From DN-350 mm (14") and above, the disc is covered with a Zinc Phosphate epoxy-priming coat plus other finish epoxy enamel coat with two-component (3:1) black colour (RAL 9005 approx.) and approximate thickness between 80 and 100 µ.

All discs between DN-50 mm (2") to DN-600 mm (24") in ductile iron, cast iron and carbon steel can be processed with an electrolytic black colour RAL 9011 treatment so called KATAPHORESIS having and approximate thickness between 35 and 40 µ. These discs are available on request.

Stainless steel discs are dry abrasive blasted having their edges polished in all diameters. DN-50 mm (2") to DN-300 mm (12") can be mirror polished, on request.

Bronze and aluminium bronze discs are dry abrasive blasted having their edges polished in all sizes. Again, from DN-50 mm (2") to DN-300 mm (12") can be mirror polished, on request.

VAMEIN DE ESPAÑA, S.A. can apply various finishes to their valves according to the customer’s specifications i.e. chrome, nickel, ceramic, PFA, PTFE, Hallar, enamel, special printing, etc.

VAMEIN DE ESPAÑA, S.A.
Calle Temple, 1 - 28760 - Tres Cantos
Madrid (ESPAÑA)
Phone. (+34) 91 803 45 17 – Email: comercial@vamein.es

1.7.3. RILSAN® MAIN FEATURES.

THE RILSAN® PROCESS DESCRIPTION ®.

The parts to be RILSAN® coated, once they have previously been cleaned of impurities, are put into an oven until reaching the necessary temperature depending on the mass of the part. Then they are dipped into a fluidified RILSAN® bed until reaching the required thickness by transference of temperature between the part and RILSAN® product. Once this process is over, the parts are hung up to let them get cool for their assembly or storage. RILSAN® product remains permanently fixed on every part contacted.

PHYSICAL PROPERTIES OF RILSAN®.

FEATURES	STANDARD	VALUE	UNIT
GRANULOMETRYC PROPERTY	P921LCF120	20-200	MICROMS
MELTING POINT	ISO-1218	184-186	º C
DENSITY AT 20º C	ISO-1183	1,04-1,11	g /cm^3
SHORE D HARDNES	ISO-868	80	-
PERSOZ D HARDNESS AT 20º C	ISO-1522	200	SECONS
RESISTENCE TO SCRATCH	CLEMEN	6,5	Kg
ABRASION RESISTANT	NFT 30-015	12	mg
MAXIMUM WATER ABSORPTION AT 20º C 65 % HR	ISO-62/1	1	%
RESISTENCE TO SALT SPRAY	NF 41-002	2.000	HOURS
DIELECTRIC COEFFICIENT	ASTM D 149	30	Kv / mm
MAXIMUN TEMPERATURE OF USE	ELF ATOCHEN	110	º C
MAXIMUN TEMPERATURE UNDER CONTINUOUS WORK	VAMEIN	80	º C
INFLAMMABILITY	ASTM D 635	SELF-EXTINGUISHING	
RESISTENCE TO SEA WATER	NO CORROSION AFTER 10 YEARS		

Rilsan®, as a coating for products to be in contact with drinking water intended for human consumption, is among others approved by the following Companies: F.D.A., NSF, DGS, DWI, DVGW.

VAMEIN DE ESPAÑA, S.A.
Calle Temple, 1 - 28760 - Tres Cantos
Madrid (ESPAÑA)
Phone. (+34) 91 803 45 17 – Email: comercial@vamein.es

RESISTENCE OF RILSAN® TO SOME IMPORTANT CHEMICAL PRODUCTS.

G = GOOD L = LIMITED

PRODUCT	CONCENTRATION	RESISTANCE		
		20º C	40º C	60º C
Acetone	Pure	G	G	L
Agricultural sprays		G	G	
Ammonia	Concentrated	G	G	G
Beer		G		
Calcium chloride		G	G	G
Citric acid		G	G	L
Copper sulphate	Concentrated solutions	G	G	G
Fruit juices		G	G	
Gas-oil		G	G	G
Glucose		G	G	G
Glycerine	Pure	G	G	L
Greases		G	G	G
Hydrocarbons		G	G	G
Hydrogen		G	G	G
Kerosene		G	G	
Lactic acid		G	G	G
Milk		G	G	G
Oils		G	G	G
Oxygen		G	G	L
Petrol		G	G	G
Sea Water		G	G	G
Sodium carbonate	Concentrated solutions	G	G	L
Sodium chloride	Saturated	G	G	G
Stearine		G	G	G
Sulphur		G	G	
Sulphuric acid	1 %	G	L	L
Turpentine		G	G	G
Wine		G		

RILSAN® CHEMICAL RESISTANCE.

Conditions after 18 months contacts

G = Good L = Limited P = Poor

INORGANIC BASES	CONCENTRATION	RESISTANCE		
		20º C	40º C	60º C
Ammonia	Liquid or gas	G	G	
Ammonium hydroxide	Concentrated	G	G	G
Lime-wash		G	G	G
Potassium hydroxide	50%	G	L	P
Sodium hydroxide	5%	G	G	L
Sodium hydroxide	10%	G	L	L
Sodium hydroxide	50%	G	L	P

VAMEIN DE ESPAÑA, S.A.
Calle Temple, 1 - 28760 - Tres Cantos
Madrid (ESPAÑA)
Phone. (+34) 91 803 45 17 – Email: comercial@vamein.es

RILSAN® CHEMICAL RESISTANCE.

Conditions after 18 months contacts

G = Good L = Limited P = Poor

INORGANIC ACIDS	CONCENTRATION	RESISTANCE		
		20º C	40º C	60º C
Chromic acid	10%	P	P	P
Hydrochloric acid	1%	G	L	P
Hydrochloric acid	10%	G	L	P
Nitric acid	All concentrations	P	P	P
Phosphoric acid	50%	G	L	P
Sulphur trioxide		L	P	P
Sulphuric acid	1%	G	L	L
Sulphuric acid	10%	G	L	P

INORGANIC SALTS	CONCENTRATION	RESISTANCE		
		20º C	40º C	60º C
Alum	Concentrated solutions	G	G	G
Aluminium sulphate	Concentrated solutions	G	G	G
Ammonium nitrate	Concentrated solutions	G	G	G
Ammonium sulphate	Concentrated solutions	G	G	L
Ammonium sulphate	Concentrated solutions	G	G	L
Barium chloride	Concentrated solutions	G	G	G
Calcium arsenate	Concentrated solutions	G	G	G
Calcium arsenate	Concentrated solutions	G	G	L
Calcium chloride	Concentrated solutions	G	G	G
Cooper sulphate	Concentrated solutions	G	G	G
Diammonium phosphate	Concentrated solutions	G	G	L
Magnesium chloride	50 %	G	G	G
Potassium ferrocyanide	Concentrated solutions	G	G	G
Potassium sulphate	Concentrated solutions	G	G	G
Sodium carbonate	Concentrated solutions	G	G	L
Sodium chloride	Saturated	G	G	G
Sodium silicate	Concentrated solutions	G	G	
Sodium sulphide	Concentrated solutions	G	L	L
Trisodium phosphate	Concentrated solutions	G	G	G

VAMEIN DE ESPAÑA, S.A.
Calle Temple, 1 - 28760 - Tres Cantos
Madrid (ESPAÑA)
Phone. (+34) 91 803 45 17 – Email: comercial@vamein.es

RILSAN® CHEMICAL RESISTANCE.

Conditions after 18 months contacts

G = Good L = Limited P = Poor

OTHER INORGANIC PRODUCTS	CONCENTRATION	RESISTANCE		
		20º C	40º C	60º C
Agricultural spray		G	G	
Bleach solution		L	P	P
Bromine		P	P	
Chlorine		P	P	P
Fluorine		P	P	P
Hydrogen		G	G	G
Hydrogen peroxide	20 vol	G	L	
Mercury		G	G	G
Oxygen		G	G	L
Ozone		L	P	P
Potassium permanganate	5%	P	P	
Sea water		G	G	G
Soda water		G	G	G
Sulphur		G	G	
Water		G	G	G

ORGANIC BASES	CONCENTRATION	RESISTANCE		
		20º C	40º C	60º C
Aniline	Pure	L	P	P
Diethanolamine	20%	G	G**	G**
Pyridine	Pure	L	P	P
Urea		G	G	L

ORGANIC ACIDS AND ANHYDRIDES	CONCENTRATION	RESISTANCE		
		20º C	40º C	60º C
Acetic acid		L	P	P
Acetic anhydride		L	P	P
Citric acid		G	G	L
Formic acid		P	P	P
Lactic acid		G	G	G
Oleic acid		G	G	G
Oxalic acid		G	G	L
Picric acid		L	P	P
Stearic acid		G	G	G
Tartaric acid	Saturated solutions	G	G	G
Uric acid		G	G	G

VAMEIN DE ESPAÑA, S.A.
Calle Temple, 1 - 28760 - Tres Cantos
Madrid (ESPAÑA)
Phone. (+34) 91 803 45 17 – Email: comercial@vamein.es

RILSAN® CHEMICAL RESISTANCE.

Conditions after 18 months contacts

G = Good L = Limited P = Poor

HIDROCARBONS	CONCENTRATION	RESISTANCE		
		20º C	40º C	60º C
Acetylene		G	G	G
Benzene		G	G**	L
Butane		G	G	G
Cyclohexane		G	G	L
Decalin		G	G	G
Forane ®12 (CFC)		G		
Forane ®22 (CFC)		G		
Hexane		G	G	G
Methane		G	G	G
Naphthalene		G	G	G
Propane		G	G	G
Styrene		G	G**	
Toluene		G	G**	L
Xilene		G	G**	L

ALCOHOLS	CONCENTRATION	RESISTANCE		
		20º C	40º C	60º C
Benzyl alcohol		L	P	P
Butanol alcohol		G**	L	P
Ethanol alcohol	Pure	G**	G	L
Glycerine	Pure	G	G	L
Glycol		G	G	G
Methanol alcohol	Pure	G**	L	P

ALDEHYDES AND KETONES	CONCENTRATION	RESISTANCE		
		20º C	40º C	60º C
Acetaldehyde		G	L	P
Acetone	Pura	G	G**	L
Benzaldehyde		G	L	P
Cicloexanone		G	L	P
Formaldehyde	Technical	G	L	P
Methylenthylketone		G	G	L
Methylisobutylketone		G	G	L
Acetaldehyde		G	L	P

VAMEIN DE ESPAÑA, S.A.
Calle Temple, 1 - 28760 - Tres Cantos
Madrid (ESPAÑA)
Phone. (+34) 91 803 45 17 – Email: comercial@vamein.es

RILSAN® CHEMICAL RESISTANCE.

Conditions after 18 months contacts

G = Good L = Limited P = Poor

CHLORINATED SOLVENTS	CONCENTRATION	RESISTANCE		
		20º C	40º C	60º C
Carbon tetrachloride		P		
Methyl bromide		G	P	
Methyl chloride		G	P	
Perchloroethylene		G	G	L
Trichloroethane		L	P	
Trichloroethylene		G	L	

PHENOLS	CONCENTRATION	RESISTANCE		
		20º C	40º C	60º C
Phenols		P	P	P

SALTS, ESTERS AND ETHERS	CONCENTRATION	RESISTANCE		
		20º C	40º C	60º C
Amyl acetate		G	G	G
Butyl acetate		G	G	G
Diethyl ether		G		
Dioctylphosphate		G	G	G
Dioctylphthalate		G	G	G
Ethyl acetate		G	G	G
Fatty acid esters		G	G	G
Methyl acetate		G	G	G
Methyl sulphate		G	L	
Tributylphosphate		G	G	G
Tricresylphosphate		G	G	G

VARIOUS ORGANIC COMPOUNDS	CONCENTRATION	RESISTANCE		
		20º C	40º C	60º C
Anethol		G		
Carbon disulphide		G**	L*	P
Dimethyl formamide		G	G	L
Ethylene chlorhydrin		P	P	
Ethylene oxide		G	G	L
Furfurol		G	G**	L
Glucose		G	G	G
Tetraethyl lead		G		
Tetrahydrofurane		G	G	L

VAMEIN DE ESPAÑA, S.A.
Calle Temple, 1 - 28760 - Tres Cantos
Madrid (ESPAÑA)
Phone. (+34) 91 803 45 17 – Email: comercial@vamein.es

VARIOUS PRODUCTS	CONCENTRATION	RESISTANCE		
		20º C	40º C	60º C
Agricultural sprays		G		
Beer		G		
Cider		G		
Crude petroleum		G	G	G**
Emulsions 2,4-D Lindane-D.D.T.		G		
Fruit juices		G	G	
Fuel-oil		G	G	G
Diesel fuel		G	G	G**
Greases		G	G	G
Ground-nut oil		G	G	
High octane petrol		G	G	G**
Kerosene		G	G	G**
Milk		G	G	G
Mustard		G		
Normal petrol		G	G	G**
Oils		G	G	G
Soap solution		G		
Solvent naphtha		G	G	G**
Stearin		G	G	G
Town gas		G	G	
Turpentine		G	G	G**
Vinegar		G		
Wine		G		

*** Slight yellowing.**

**** Swelling action.**

VAMEIN DE ESPAÑA, S.A.
Calle Temple, 1 - 28760 - Tres Cantos
Madrid (ESPAÑA)
Phone. (+34) 91 803 45 17 – Email: comercial@vamein.es

VAMEIN DE ESPAÑA, S.A.
Calle Temple, 1 - 28760 - Tres Cantos
Madrid (ESPAÑA)
Phone. (+34) 91 803 45 17 – Email: comercial@vamein.es

1.7.4. KATAPHORESIS COATING MAIN FEATURES.

HIGH THICKNESS KATAPHORESIS PAINTING DESCRIPTION.

The KATAPHORESIS, technically named "POWERCROWN (R) 640", has a Catonic Epoxidic quality and belongs to fourth generation of Kataphoresis Epoxy. It is black colour and medium gloss. It is a painting system carried out by immersion. By means of an electric current there is a removal of painting particles from the cathode towards the part to be coated.

In the KATAPHORESIS or cathodic electrodeposition, the following main elements for the microcrystalline trication process take part:

- **ELECTROLYSIS:** Dissociation of the bath electrolyte by means of an ion discharge.
- **ELECTROPHORESIS:** Transport of particles in suspension.
- **ELECTROOSMOSIS:** Displacement of the liquid stage through the light film of paint which is being formed.

The result of this process is wholly effective against corrosion and guarantees its thickness homogeneity.

HIGH THICKNESS KATAPHORESIS PREVIOUS PROCESS DESCRIPTION.

Previously to the painting stage, the parts are put into a processing tunnel in order to get a tricationic microcrystalline phosphate coat between 1,6 y 2 gr/m². The following stages are carried out by sprinkling:

- Removal of the grease.
- Washing.
- Phosphatising.
- Washing.
- Demineralised water washing.

Then, the parts are painted by means of the black colour cathodic electrodeposition inside the KATAPHORESIS barrel. Later on, they are put into a washing tunnel with ultrafiltering system. Finally, they are washed with demineralised water. Drying time is 20 minutes at 165° C.

PROPERTIES OF THE HIGH THICKNESS KATAPHORESIS COATING.

- **APPEARANCE:** The dry film gives an even appearance, with no drops, craters or any defects.
- **STICKING:** No unstitching happens after grid scratch.
- **THICKNESS:** Wholly even. Between 35 and 40 µ.
- **PERSOZ HARDNESS:** Results are above 190 seconds.
- **HUMIDITY RESISTANCE:** No superficial corrosion after 1.000 hours of exposure.
- **SALT SPRAY RESISTANCE:** No superficial corrosion after 800 hours of exposure S/ASTM B 117.
- **MAXIMUM TEMPERATURE OF USE:** Up to 180 °C under continuous use.

VAMEIN DE ESPAÑA, S.A.
Calle Temple, 1 - 28760 - Tres Cantos
Madrid (ESPAÑA)
Phone. (+34) 91 803 45 17 – Email: comercial@vamein.es

1.7.5. HALAR® COATING MAIN FEATURES.

Halar® ECTFE, a copolymer of ethylene and chlorotrifluoroethylene, is a semi-crystalline melt processable partially fluorinated polymer. It is available in different grades that are specifically designed for electrostatic powder coating.
Halar® ECTFE is particularly suitable for use as a coating material in protection and anti-corrosion applications thanks to its unique combination of properties.

Key features

- Very good chemical and thermal resistance
- Optimum permeation resistance
- Outstanding flame resistance
- Very good surface characteristics
- Surface smoothness
- Purity

Protective Coatings

Halar® ECTFE have a history of success as protective coatings for aggressive environments due to the fact that it is not sensitive to pH, moisture and strong oxidizers and are not attacked by a broad variety of chemicals. In addition Halar® ECTFE powder coatings deliver seamless and smooth corrosion protection.

Electrostatic Powder Coating

Generally the procedure involves substrate preparation, spray coating, baking and cooling.
Several passes maybe required to obtain the desired Halar® ECTFE load and build up coating thickness.

TYPICAL PROPERTIES	STANDARD	SYMBOL	VALUE
Melting point		º C	220-227
Specific gravity			1,68
Max continuous service temperature		º C	150
Oven process temperature		º C	250-280
Thermal expansion coefficient		10^{-5} / º C	8
Flexural modulus @ 22º C	ASTM D790	MPa	1.700
Tensile modulus @ 22º C	ASTM D638	MPa	1.700
Yield stress @ 22º C	ASTM D638	MPa	32
Tensile strength at break@ 22º C	ASTM D638	MPa	48
Hardness Rockwell -Pencil		kV	R93 -4B
Hardness Shore			D 75
Impact strength notch Izod @ 25º C		J/m	no break
Flammability			94 V-0
Oxygen index		%	60
Volume resistivity	ASTM 0257	ohm.cm	10^{16}
Dielectric constant @ 1 MHz			2,5
Dielectric strength 3 mm thick		kV/mm	14,5
Dissipation factor @ 1 MHz			0,009
Water absorption		%	< 0,01
Permeability (cm^3(STP)*mm/m^2*atm*24 h)*10^2)			
O_2 @ 25º C			0,2
N_2 @ 25º C			0,1
H_2O (vapor) @ 25º C			7,5
Permeability (g * mm/m2 *24 h)			
HCl 37% @ 50º C			0,5
Methanol @ 50º C			0,3
H_2O (liq.) @ 50•C			0,5
Low temperature embrit.		º C	<-76

Applications:

Typical applications served by Halar® ECTFE include those in contact with highly corrosive or ultrapure chemicals such as strong inorganic bases and strongmineral and oxidizing acids including:

- Valves and Piping systems
- Vessels
- Reactors
- Semiconductor chemical storage tanks and ductwork
- Centrifuges
- Agitators
- Exhaust hoods
- Filters
- Electroplating equipment

VAMEIN DE ESPAÑA, S.A.
Calle Temple, 1 - 28760 - Tres Cantos
Madrid (ESPAÑA)
Phone. (+34) 91 803 45 17 – Email: comercial@vamein.es

2. RESILIENT SEATED VALVES. MANUFACTURING RANGE

2.1. WAFER TYPE. 2

2.1.1. WAFER TYPE. 100 SERIES. ..... 2 to 16

2.1.2. ALUMINIUM BODY LIGHT WAFER TYPE. 160 SERIES. ..... 17 to 23

2.2. FLANGED TYPE. 200 SERIES..... 24 to 38

2.3. LUG TYPE. 500 SERIES. ..... 39 to 50

100 Series, Wafer type.
DN 50-2000 (2”-80”)

100 Series, Wafer type.
DN 50-2000 (2”-80”)

200 Series, Flanged type.
DN 100-2000 (4”-80”)

500 Series, Lug type.
DN 50-600 (2”-24”)

VAMEIN DE ESPAÑA, S.A.
Calle Temple, 1 - 28760 - Tres Cantos
Madrid (ESPAÑA)
Phone. (+34) 91 803 45 17 – Email: comercial@vamein.es

2.1. WAFER TYPE.

2.1.1. WAFER TYPE. 100 SERIES

VAMEIN DE ESPAÑA, S.A.
Calle Temple, 1 - 28760 - Tres Cantos
Madrid (ESPAÑA)
Phone. (+34) 91 803 45 17 – Email: comercial@vamein.es

We manufacture WAFER TYPE valves from DN-50 mm (2") to DN-1200 mm (48") in standard execution and from DN-1300 mm. (52") to DN-2000 mm. (80") as special production.

Assembly between flanges: Multiflange system from DN-50 (2") to DN-300 (12") allowing with only one model of valve, the assembly between PN-6, PN-10, PN-16, ASME-B 16.5 125/150 Lbs and B.S. 10-D/E flanges.
From DN-350 (14") flanges are assembled according to PN-10, PN-16, ASME B 16.5 150 Lbs or ASME B 16.47 A-SERIES 150 Lbs, BS, AWWA, and any other standard on request.

Standard working pressure: 16 Bar (DN 50-300) and 10 bar (DN 350-2000). For higher working pressures, ask our Technical Department.

Temperature limits: –40ºC to +180ºC (depending on liners and coatings).

Our design includes four centring holes to allow a perfect alignment and quick fitting between flanges, up to DN-500 mm (20"). From DN-600 mm (24") onwards we include tapped holes on both sides of the body as well as the four centring holes.

As this is a pattern to be fitted between flanges, the mechanical stress of the pipe is transmitted to the valve only by compression on the body and there is no mechanical tension stress which might create watertightness problems. (It is necessary to take into consideration that DN-600 mm - 24" bodies and larger have four tapped holes on both.

LIST OF DRAWINGS				
W A F E R T Y P E				
1 0 0 S E R I E S				
DRAWING Nº	**D.N.**	**ACTUATOR**	**REFERENCE**	**PAG.**
W-001	50 - 300	Bare shaft	S.100-E/01	4
W-002	350 - 500	Bare shaft	S.100-E/02	5
W-003	600 / 700 / 1200	Bare shaft	S.100-E/03 S20	6
W-004	650 / 750 / 800 / 900 / 1000	Bare shaft	S.100-E/04	7
W-005	1300 – 2000 (Special)	Bare shaft	S.100-E/05	8
W-006	50 - 200	Lever	S.100-P/06	9
W-007	250 / 300	Lever	S.100-P/07	10
W-008	50 - 300	Gear box	S.100-RS/08	11
W-009	50 - 300	Gear box (Aluminum)	S.100-RS/09	12
W-010	350 - 500	Gear box	S.100-RS/10	13
W-011	600 / 700 / 1200	Gear box	S.100-RS/11 S20	14
W-012	650 / 750 / 800 / 900 / 1000	Gear box	S.100-RS/12	15
W-013	1300 – 2000 (Special)	Gear box	S.100-RS/13	16

VAMEIN DE ESPAÑA, S.A.
Calle Temple, 1 - 28760 - Tres Cantos
Madrid (ESPAÑA)
Phone. (+34) 91 803 45 17 – Email: comercial@vamein.es

2.1.2. ALUMINIUM BODY LIGHT WAFER TYPE. 160 SERIES

VAMEIN DE ESPAÑA, S.A.
Calle Temple, 1 - 28760 - Tres Cantos
Madrid (ESPAÑA)
Phone. (+34) 91 803 45 17 – Email: comercial@vamein.es

This design has been created to comply with the market needs requiring a light valve with a low price. Ideal for irrigation, air conditioning and swimming pool installations.

We manufacture WAFER TYPE valves light series from DN-50 mm (2") to DN-300 mm (12")

Assembly between flanges: Multiflange system allowing with only one model of valve, the assembly between PN-10, PN-16, ASME B 16.5 125/150 Lbs and B.S. 10-D/E flanges.

Standard working pressure: 10 Bar (150 psi). For higher working pressures, ask our Technical Department.

Temperature limits: –40ºC to +180ºC (depending on liners and coatings).

Our standard design includes two centring holes from DN-50 mm (2") to DN-200 mm (8"), and four centring holes for DN-250 (10") and DN-300 (12"), to allow a perfect alignment and quick fitting between flanges.

As this is a pattern to be fitted between flanges, the mechanical stress of the pipe is transmitted to the valve only by compression on the body and there is no mechanical tension stress which might create watertightness problems.

LIST OF DRAWINGS				
LIGHT WAFER TYPE				
160 SERIES				
DRAWING Nº	**D.N.**	**ACTUATOR**	**REFERENCE**	**PAG.**
WL-001	50 - 300	Bare shaft	S.160-E/01	19
WL-002	50 - 200	Lever	S.160-P/02	20
WL-003	250 / 300	Lever	S.160-P/03	21
WL-004	50 - 300	Gearbox	S.160-RS/04	22
WL-005	50 - 300	Gearbox (Aluminum)	S.160-RS/05	23

VAMEIN DE ESPAÑA, S.A.
Calle Temple, 1 - 28760 - Tres Cantos
Madrid (ESPAÑA)
Phone. (+34) 91 803 45 17 – Email: comercial@vamein.es

2.2. FLANGED TYPE. 200 SERIES.

VAMEIN DE ESPAÑA, S.A.
Calle Temple, 1 - 28760 - Tres Cantos
Madrid (ESPAÑA)
Phone. (+34) 91 803 45 17 – Email: comercial@vamein.es

We manufacture flanged type valves from DN-100 mm (4") to DN-1200 mm (48") in standard execution and from DN-1300 mm. (52") to DN-2000 mm. (80") as special production.

Integral drilling to situate the flanges by: PN-10, PN-16, ASME B 16.5 150 Lbs or ASME B 16.47 A-SERIES 150 Lbs, B.S., AWWA, etc., reduces the time needed to install them and aligns them perfectly with the pipe's flanges.

Standard working pressure: 16 Bar (DN 100-300) and 10 bar (DN 350-2000). For higher working pressures, ask our Technical Department.

Temperature limits: –40ºC to +180ºC (depending on liners and coatings).

As this is a pattern to be fitted between flanges, the mechanical stress of the pipe is transmitted to the valve only by compression on the body and there is no mechanical tension stress which might create watertightness problems. (It is necessary to take into consideration that DN-600 mm - 24" bodies and larger have four threaded drill holes on both sides)

LIST OF DRAWINGS				
FLANGED TYPE				
200 SERIES				
DRAWING Nº	**D.N.**	**ACTUATOR**	REFERENCE	**PAG.**
B-001	100 - 300	Bare shaft	S.200-E/01	26
B-002	350 - 500	Bare shaft	S.200-E/02	27
B-003	600 / 700 / 1200	Bare shaft	S.200-E/03 S20	28
B-004	650 / 750 / 800 / 900 / 1000	Bare shaft	S.200-E/04	29
B-005	1300 – 2000 (Special)	Bare shaft	S.200-E/05	30
B-006	100 - 200	Lever	S.200-P/06	31
B-007	250 / 300	Lever	S.200-P/07	32
B-008	100 - 300	Gear box	S.200-RS/08	33
B-009	100 - 300	Gear box (Aluminum)	S.200-RS/09	34
B-010	350 - 500	Gear box	S.200-RS/10	35
B-011	600 / 700 / 1200	Gear box	S.200-RS/11 S20	36
B-012	650 / 750 / 800 / 900 / 1000	Gear box	S.200-RS/12	37
B-013	1300 – 2000 (Special)	Gear box	S.200-RS/13	38

VAMEIN DE ESPAÑA, S.A.
Calle Temple, 1 - 28760 - Tres Cantos
Madrid (ESPAÑA)
Phone. (+34) 91 803 45 17 – Email: comercial@vamein.es

2.3. LUG TYPE. 500 SERIES.

VAMEIN DE ESPAÑA, S.A.
Calle Temple, 1 - 28760 - Tres Cantos
Madrid (ESPAÑA)
Phone. (+34) 91 803 45 17 – Email: comercial@vamein.es

We manufacture LUG Type valves from DN-50 mm (2") to DN-600 mm (24").

Assembling between flanges by: PN-10, PN-16, ASME B 16.5 150 Lbs or ASME B 16.47 A-SERIES 150 Lbs. Any other standard on request.

Standard working pressure: 16 Bar (DN 50-300) and 10 bar (DN 350-600). For higher working pressures, ask our Technical Department.

Temperature limits: –40ºC to +180ºC (depending on liners and coatings).

As this is a pattern to be usually used with bolts threaded to the body of the valve, it is necessary to take into consideration that the pipe transmits mechanical tension and compression stress which might cause watertightness problems. Therefore, compensation joints or any other elements absorbing these mechanical effects should be used.

Its use allows the valve to be repaired downstream as the valve remains fixed to the upstream flange (See figure bellow).

This valve allows the positioning of other valves or apparatus next to it gaining free space and eliminating accessories.

Due to its design it allows a perfect alignment with the pipe flanges.

When assembling, modifying or repairing the installation, the VAMEIN LUG Type butterfly valve can temporarily work as end of line. Furthermore, the following pressures must never be exceeded:

- DN-50 mm (2") to DN-150 mm (6") ≤ 5,6 Kg/cm².
- -DN-200 mm (8") to DN-600 mm (24") ≤ 3,5 kg/cm².

For larger Nominal Diameters contact our Technical Department.

- **Calculation Formula:** Working pressure x 0,35 = Maximum valve pressure to work as end of line.

Once the repairs are finished and before returning the line to normal working order, you must assemble the pipe downstream or place a supplementary loose flange so that the valve is between two flanges.

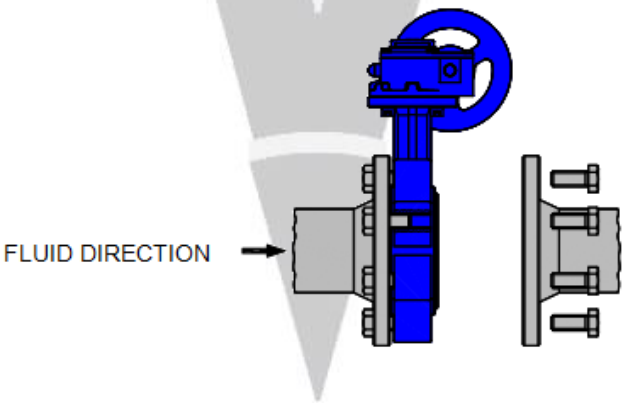

VAMEIN DE ESPAÑA, S.A.
Calle Temple, 1 - 28760 - Tres Cantos
Madrid (ESPAÑA)
Phone. (+34) 91 803 45 17 – Email: comercial@vamein.es

LIST OF DRAWINGS				
LUG TYPE				
500 SERIES				
DRAWING Nº	**D.N.**	**ACTUATOR**	**REFERENCE**	**PAG.**
L-001	50 - 300	Bare shaft	S.500-E/01	42
L-002	350 - 500	Bare shaft	S.500-E/02	43
L-003	600	Bare shaft	S.500-E/03	44
L-004	50 - 200	Lever	S.500-P/04	45
L-005	250 / 300	Lever	S.500-P/05	46
L-006	50 - 300	Gearbox	S.500-RS/06	47
L-007	50 - 300	Gearbox (Aluminum)	S.500-RS/07	48
L-008	350 - 500	Gearbox	S.500-RS/08	49
L-009	600	Gearbox	S.500-RS/09	50

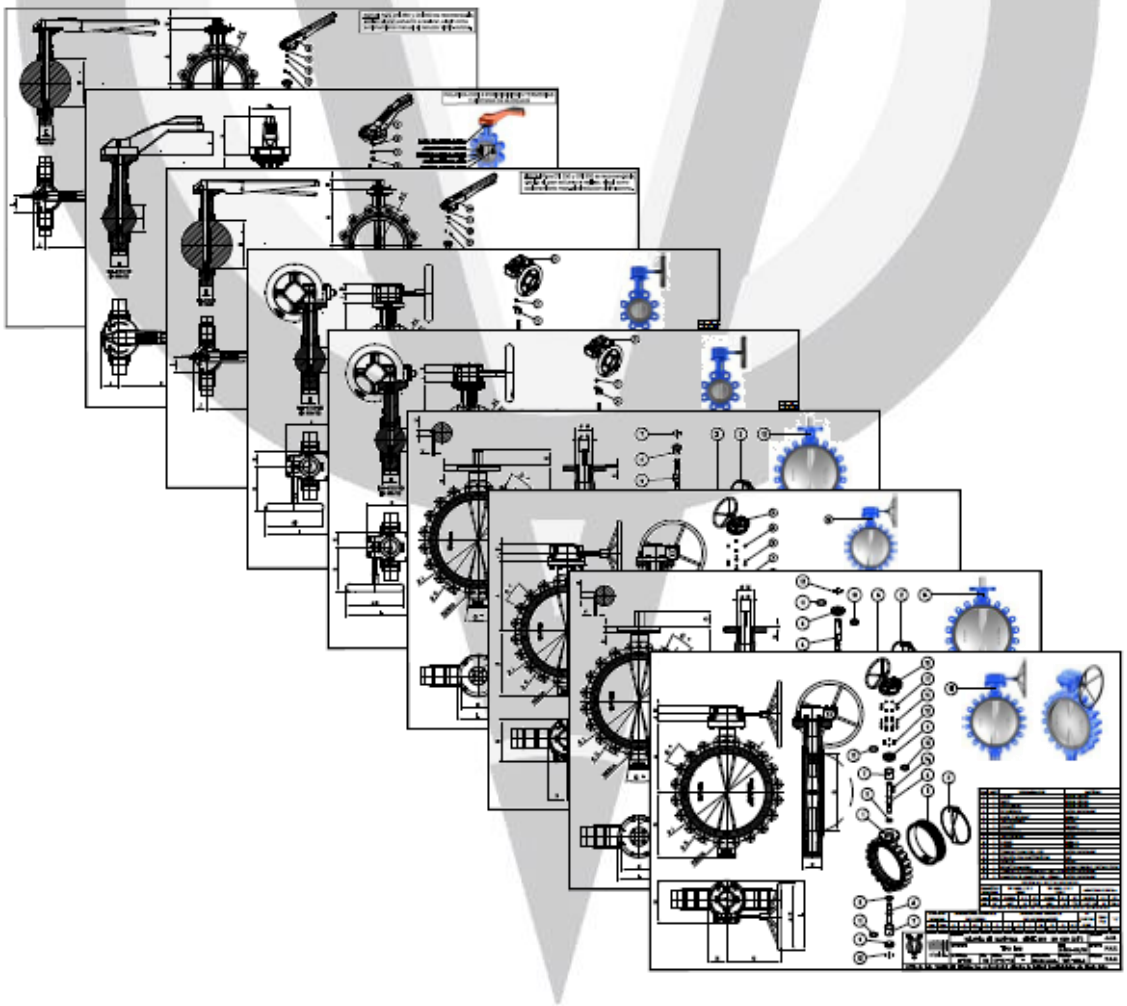

VAMEIN DE ESPAÑA, S.A.
Calle Temple, 1 - 28760 - Tres Cantos
Madrid (ESPAÑA)
Phone. (+34) 91 803 45 17 – Email: comercial@vamein.es

3. ACTUATORS FOR RESILENT SEATED VALVES.

3.1. QUARTERTURN LEVER OPERATOR. 2
3.2. GEAR BOX OPERATOR. 3
3.3. PNEUMATIC ACTUATOR VP TYPE. ..... 4 to 5
3.4. PNEUMATIC ACTUATOR VCH TYPE. ..... 6 to 7
3.5. ELECTRIC ACTUATOR VAC TYPE. ..... 8 to 9
3.6. ELECTRIC ACTUATOR VAU TYPE. ..... 10 to 11
3.7. ELECTRIC ACTUATOR VJ TYPE. 12
3.8. DIMENSIONS OF VALVE ACTUATOR ASSEMBLIES. 13
3.9. SPECIAL EXECUTIONS..... 14 to 15

A very basic aspect of the **VAMEIN** butterfly valve and its actuators is the possibility to interchange these without having to make any modifications, add any elements or change the valve machining or actuators. This interchange can be made on site without having to disassemble anything that would stop the flow of the fluid which is always problematic and expensive.

VAMEIN DE ESPAÑA, S.A.
Calle Temple, 1 - 28760 - Tres Cantos
Madrid (ESPAÑA)
Phone. (+34) 91 803 45 17 – Email: comercial@vamein.es

3.1. QUARTERTURN LEVER OPERATOR.

PAI-01/02 (DN 50-200)

Features:

- Injected aluminium casting.
- Stainless steel bolting.
- Complete integrated lever set for direct mounting on valve.
- Ideal for mounting in pipe-systems wiht heat-insulation.
- 6 regulating positions.
- Interchangeable plate for VAMEIN logo (Other logo-types upon request).
- Padlock locking device. (Optional padlock)
- Possibility to fit limit switches for remote position indication.

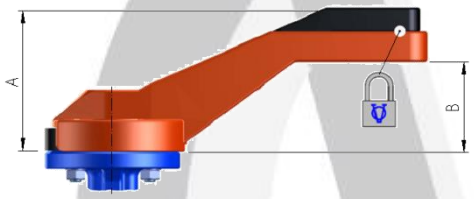

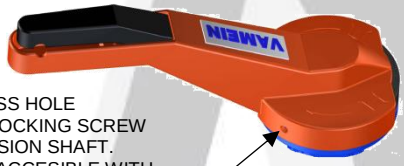

ACCESS HOLE
TO LEVER´S LOCKING SCREW
WITH TORSION SHAFT.
SCREW ONLY ACCESIBLE WITH
THE LEVER IN "CLOSED" POSITION.

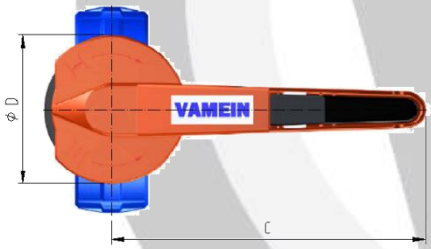

Code	DN	A	B	C	Ø D	Lever weight (Kg)
PAI01-11	**50-80**	95	58	220	100	0,7
PAI01-14	**100**	95	58	220	100	0,7
PAI02-14	**125**	95	58	320	100	0,8
PAI02-17	**150/200**	95	58	320	100	0,8

PA-1005 (DN 250-300)

Features:

- Aluminium casting.
- 10 regulating positions.
- Possibility to fit limit switches for remote position indication.

N.B.: For DN 250 and 300 valves due to the great necessary torque, the use of a gearbox instead of a lever is recommended.

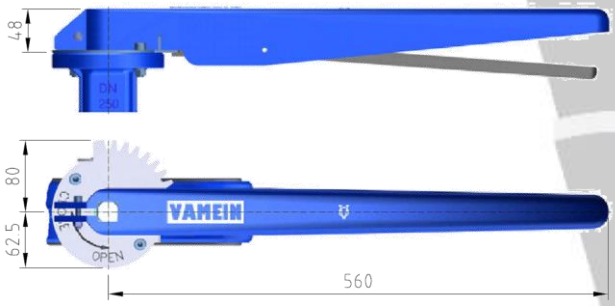

Code	DN	Lever weight (Kg)
PA1005-22	**250/300**	2,4

- For dimensions of valves and lever assemblies, refer to page Nº 13.

VAMEIN DE ESPAÑA, S.A.
Calle Temple, 1 - 28760 - Tres Cantos
Madrid (ESPAÑA)
Phone. (+34) 91 803 45 17 – Email: comercial@vamein.es
www.vamein.com

3.2. GEAR BOX OPERATOR.

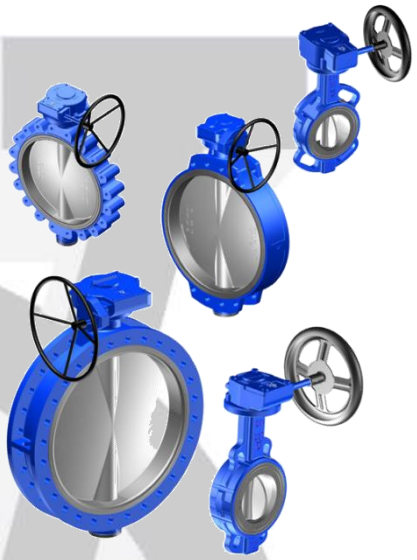

Features:

- Construction: cast iron body, gear mechanism from steel.
- Precise close position which guarantees full tightness.
- Self-blocking mechanism.
- Mechanical stoppers enabling regulation.
- Lubricated for life.
- Visual position indicator.
- Protection class IP 67.
- Possibility of padlock device.
- Possibility to fit limit switches for remote position indication.
- Underwater-application and service possible (IP 68)

(DN50-500)

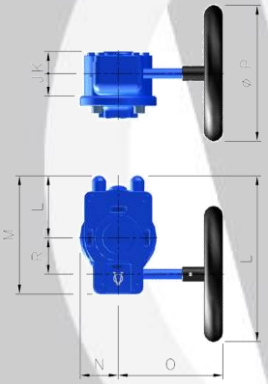

(DN 600-2000)

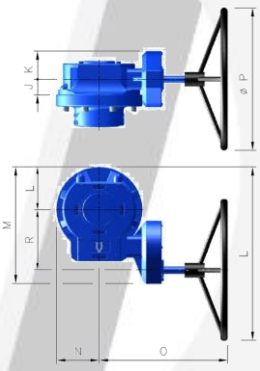

Cast Iron Gear Box Reference	J	K	L	M	N	O	Ø P	R	Ratio	Turns 90º	Weight (Kg)
RS DN-50-80	27	29	69	135	40	124	160	43	40:1	10	2,5
RS DN-100/125	27	29	69	135	40	124	160	43	40:1	10	2,5
RS DN-150/200	29	36	59	139	51	187	200	52	37:1	9,25	4,0
RS DN-250/300	29	36	59	139	51	198	250	52	37:1	9,25	4,5
RS DN-350	41	47	85	190	69	282	300	71	34:1	8,5	10,7
RS DN-400	42	51	100	227	100	270	300	86	38:1	9,5	16
RS DN-450/500	48	54	110	258	110	326	400	105	55:1	13,75	25,2
RS DN-600-800	55	69	143	335	143	417	500	130	208:1	54.34	42.9
RS DN-900/1000	59	100	170	415	185	470	600	182	312:1	81.5	67.5
RS DN-1050/1100	59	100	170	415	185	470	600	182	702:1	117	68.5
RS DN-1200-1400	85	127	208	544	220	491	700	209	705:1	182.25	139.7
RS DN-1500-2000	85	127	235	618	255	531	700	256	705:1	182,25	224.3

Aluminum Gear Box Reference	J	K	L	M	N	O	Ø P	R	Ratio	Turns 90º	Weight (Kg)
RS DN-50-80	27	27	48	111	40	124	160	43	40:1	10	1,2
RS DN-100/125	27	26	48	114	40	129	160	43	40:1	10	1,2
RS DN-150/200	27	35	48	114	40	182	200	43	40:1	10	1,8
RS DN-250/300	28	41	56	131	50	209	250	50	37:1	9,25	3,1

- For dimensions of valves and gear box operator assemblies, refer to page 13.

VAMEIN DE ESPAÑA, S.A.
Calle Temple, 1 - 28760 - Tres Cantos
Madrid (ESPAÑA)
Phone. (+34) 91 803 45 17 – Email: comercial@vamein.es

3.3. PNEUMATIC ACTUATOR VP TYPE.

Features:

- Double acting (open / close by air) or spring return (either air close or air open and return to rest position by springs).
- Fully made in stainless materials, resistant to most of corrosive agents.
- Air, water, oil or other non-corrosive fluid feed, at a maximum pressure of 8 bars.
- 90º turn (quarter turn) with a ±2º tolerance in opening / close operation.
- Temperature range from –32ºC to +90ºC under normal working conditions (intermittent peaks of –43ºC and 120ºC).
- Constant and high torque output.
- Visual position indicator.
- Can be fitted parallel or perpendicular to the pipe.
- Manual device for Emergency Operation (double acting only).

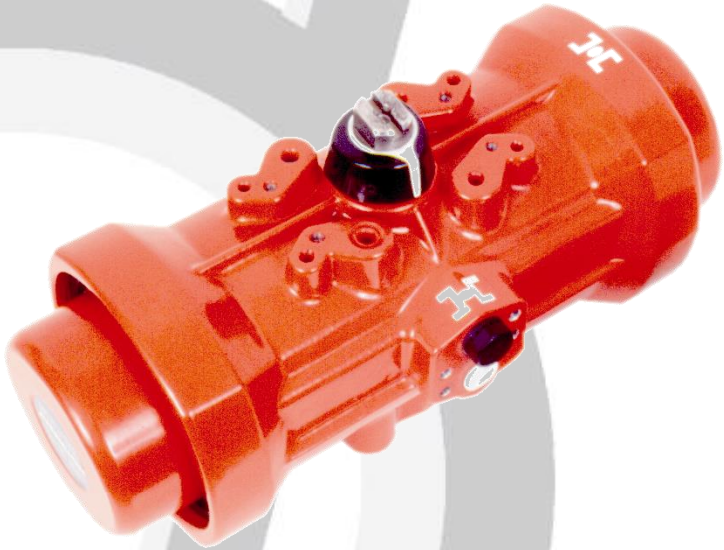

Options:

- Regulating limit switch box (electromechanical, inductive, magnetic or pneumatic) with NAMUR (VDI/VDE-3845) standard connection.
- Inductive or magnetic detectors.
- Box with built-in limit switches and solenoid valve.
- NAMUR solenoid valves (3-way for spring return and 5-way for double acting.
- Antideflagration solenoid valves.
- Pneumatic (3-15 p.s.i.) or electropneumatic
- (4-20mA) positioners.
- Direct manual override facility (double acting only up to P20).
- Manual operation by disengaging gearbox.
- Regulating opening limit devices.
- AISI 316 stainless steel actuator, valid for marine and under water installations and up to 10-bar feed (steel inside for up to 15 bar feed as option).
- Actuator for high temperature (up to 265ºC ±5ºC), up to 10 bars feed.
- -Actuator with thermoplastic housing.
- Polyamide actuator.

Selection of pneumatic VP actuators			
Double Acting		Spring Return	
Reference	DN Application	Reference	DN Application
P05	50-125	P05S	-
P10	150	P10S	50-80
P20	200	P20S	100-150
P25	250/300	P25S	-
P30	-	P30S	200
P40	350	P40S	250/300
P50	400-500	P50S	350

- For bigger DN, please consult.
- Selection made for **VAMEIN** valves working with water at ambient temperature at maximum pressure of 10 Bar.
- Feed pressure 6 Bar.
- References of selected actuators are only valid if the valve-actuator assembly is made by **VAMEIN DE ESPAÑA, S.A.**

VAMEIN DE ESPAÑA, S.A.
Calle Temple, 1 - 28760 - Tres Cantos
Madrid (ESPAÑA)
Phone. (+34) 91 803 45 17 – Email: comercial@vamein.es

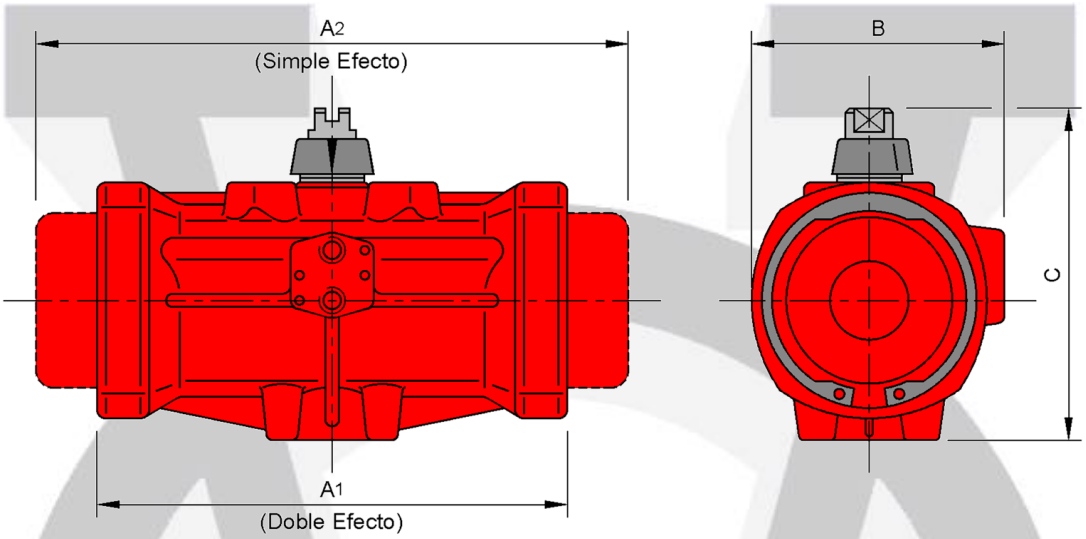

Dimensions of pneumatic VP actuators									
Double Acting					Spring Return				
Reference	A_1	B	C	Actuator Weight (Kg)	Reference	A_2	B	C	Actuator Weight (Kg)
P05	146	98	122	1,5	P05S	-	-	-	-
P10	178	98	127	1,9	P10S	222	98	127	2,6
P20	234	125	161	3,6	P20S	292	125	161	5,8
P25	276	152	191	5,9	P25S	-	-	-	-
P30	-	-	-	-	P30S	470	172	210	16,3
P40	418	201	275	19,4	P40S	642	201	275	32,4
P50	524	255	306	35	P50S	694	255	306	61,6

Dimension "L"		
DN	Double Acting	Spring Return
50	262	267
65	274	279
80	281	286
100	300	339
125	313	352
150	330	364
200	406	455
250	464	548
300	506	590
350	580	611
400	646	-
450	696	-
500	731	-

Dimensions in mm.

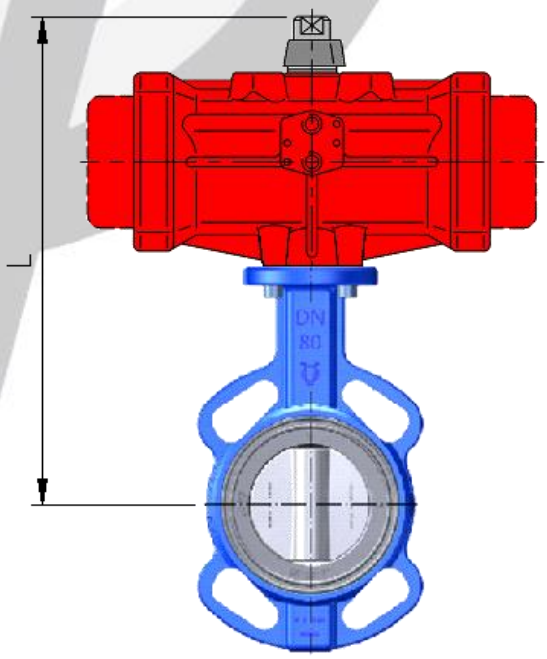

VAMEIN DE ESPAÑA, S.A.
Calle Temple, 1 - 28760 - Tres Cantos
Madrid (ESPAÑA)
Phone. (+34) 91 803 45 17 – Email: comercial@vamein.es

3.4. PNEUMATIC ACTUATOR VCH TYPE.

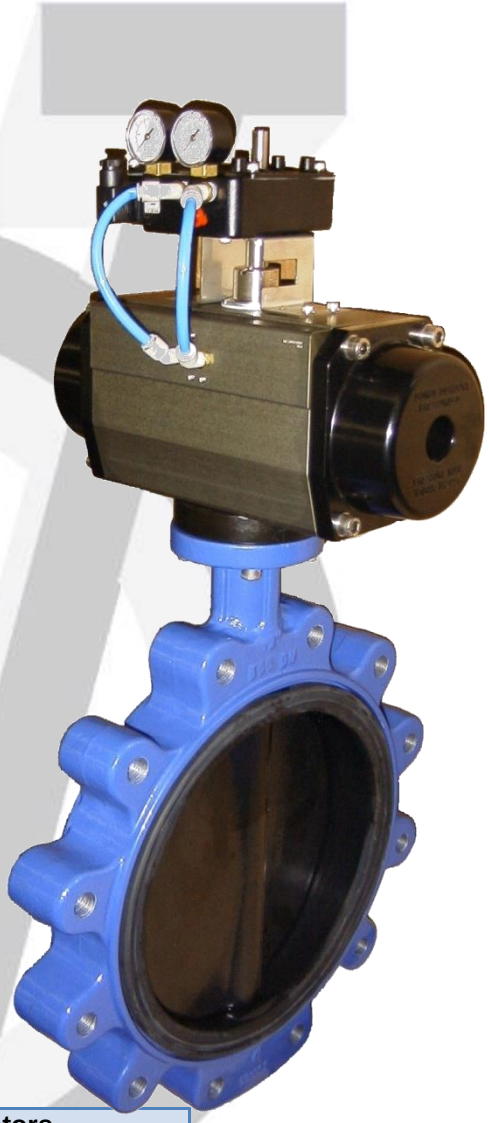

Features:

- Double acting (open / close operation by air) or spring return (either air close or air open and return to rest position by springs).
- Heavy aluminium made, resistant to most of corrosive agents.
- Clean air (dry or lubricated) oil or non-corrosive gas feed at maximum pressure of de 10 bars.
- 90º turn (quarter turn) with a ±4º tolerance in open / close operation.
- Temperature range from –20ºC to +80ºC under normal working conditions
- Constant and high torque output.
- Visual position indicator.
- Regulating limit stops in opening and close.
- Lubrication guaranteed for a minimum of 1.000.000 operations.
- Can be fitted parallel or perpendicular to the pipe.
- Manual device for Emergency Operation (double acting only).

Options:

- Chemical Nickel or Teflon coating for body and covers.
- Regulating limit switch box (electromechanical, inductive, magnetic or pneumatic) with NAMUR (VDI/VDE-3845) standard connection.
- Inductive or magnetic detectors.
- Box with built-in limit switches and solenoid valve.
- NAMUR solenoid valves (3-way for spring return and 5-way for double acting.
- Antideflagration solenoid valves.
- Pneumatic (3-15 p.s.i.) or electropneumatic (4-20 mA) positioners.
- Direct manual override facility (double acting only up to CH100).
- Manual operation by disengaging gearbox.

Selection of Pneumatic VCH actuators			
Double Acting		Spring Return	
Reference	DN Application	Reference	DN Application
CH063	50-80	**CH063SR**	-
CH075	100/125	**CH075SR**	50-80
CH100	150/200	**CH100SR**	100/125
CH125	250/300	**CH125SR**	150/200
CH160	-	**CH160SR**	250/300
CH200	350/400	**CH200SR**	-
CH270	450/500	**CH270SR**	350/400

- For bigger DN, please consult.
- Selection made for **VAMEIN** valves working with water at ambient temperature at a maximum pressure of 10 Bar.
- Feed pressure 6 Bar.
- References of selected actuators are only valid if the valve-actuator assembly is made by **VAMEIN DE ESPAÑA, S.A.**

VAMEIN DE ESPAÑA, S.A.
Calle Temple, 1 - 28760 - Tres Cantos
Madrid (ESPAÑA)
Phone. (+34) 91 803 45 17 – Email: comercial@vamein.es

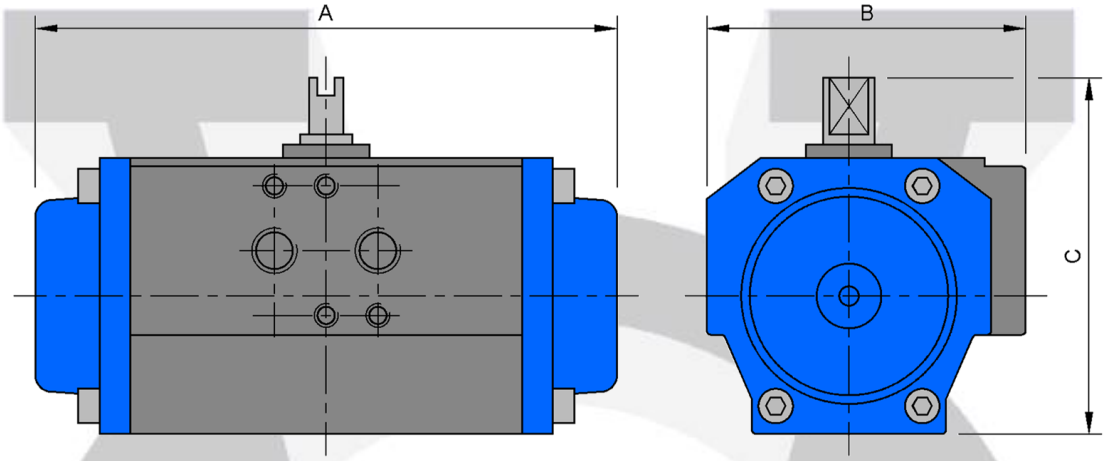

Dimensions of pneumatic VCH actuators					
Reference	Dimensions			Actuator Weight (Kg)	
D.E. / S.E.	A	B	C	D.E.	S.E.
CH063 / -	152	80	118	1,6	-
CH075 / CH075SR	202	91	120	2,9	3,5
CH100 / CH100SR	271	117	145	5,8	7
CH125 / CH125SR	360	141	185	11,9	14,5
- / CH160SR	462	176	246	-	26
CH200 / -	575	220	290	43	-
CH270 / CH270SR	684	350	380	90	112

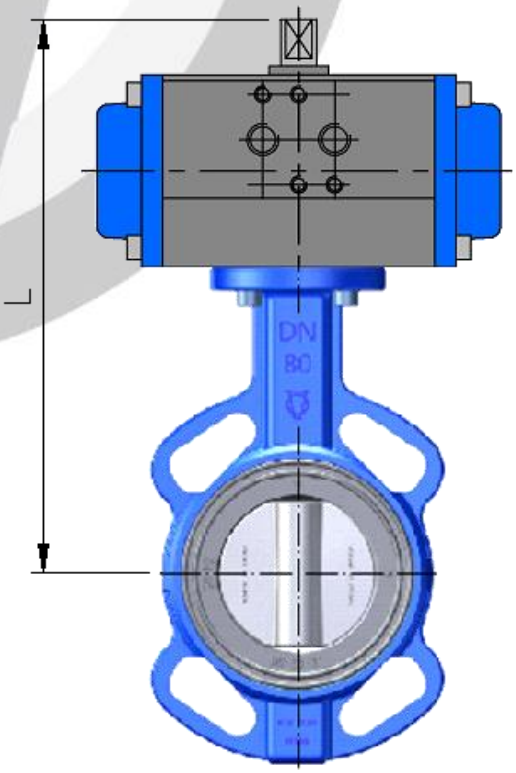

Dimension "L"		
DN	Double Acting	Spring Return
50	258	260
65	270	272
80	277	279
100	298	323
125	311	336
150	348	388
200	390	430
250	458	521
300	500	561
350	597	687
400	632	722
450	770	-
500	805	-

Dimensions in mm.

VAMEIN DE ESPAÑA, S.A.
Calle Temple, 1 - 28760 - Tres Cantos
Madrid (ESPAÑA)
Phone. (+34) 91 803 45 17 – Email: comercial@vamein.es

3.5. ELECTRIC ACTUATOR VAC TYPE.

Features:

- Cast and aluminium made with superficial protection against corrosion.
- Supply voltage: any voltage, three-phase, single phase or direct current with voltage from 24 to 500 V at 50 or 60 Hz. The standard actuator is equipped with a three-phase motor. Standard voltage is 220/380 V with frequency of 50 Hz.
- 2 high accuracy regulating limit micro switches.
- Safety thermoblock contacts.
- Visual position indicator.
- Disengaging manual control for emergency operation.
- IP-55 protection.

Options:

- - Limit torque.
- - 4-20 mA electronic positioner.
- - Additional limit switches.
- - Operation time up to 3 minutes.
- - Indication and regulating potentiometer.
- - Built-in switchboard.
- - Antideflagration protections.
- - Safety thermic contacts.
- - Anticondensation heating resistance.

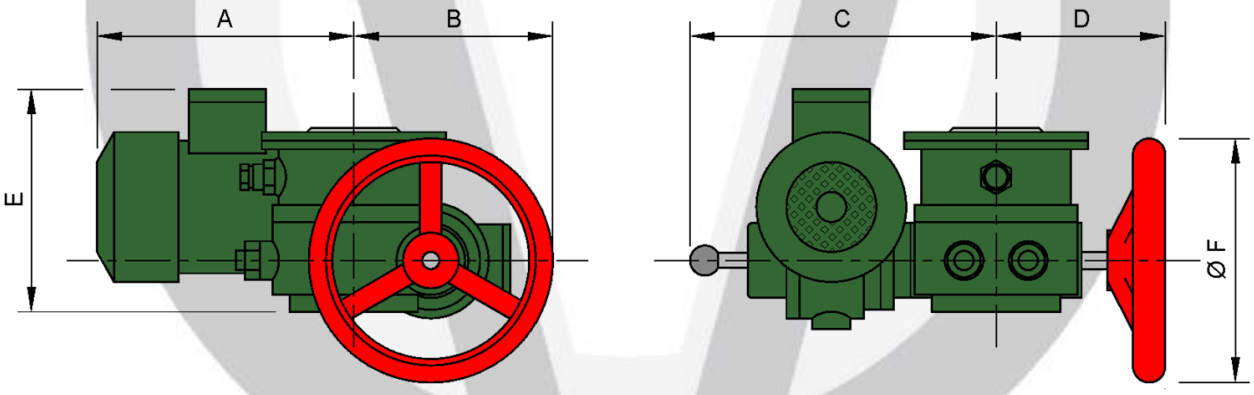

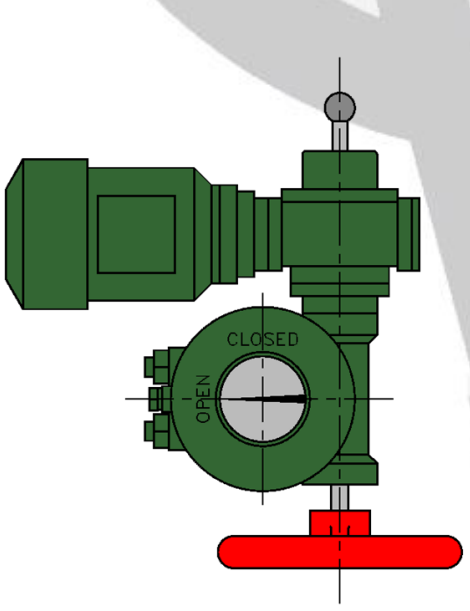

VAMEIN DE ESPAÑA, S.A.
Calle Temple, 1 - 28760 - Tres Cantos
Madrid (ESPAÑA)
Phone. (+34) 91 803 45 17 – Email: comercial@vamein.es

Dimensions of electric VAC actuators									
Reference	**DN Application**	**A**	**B**	**C**	**D**	**E**	**Ø F**	**Operation Time(Sec.)**	**Actuator Weight (Kg)**
SM-10	**50-150**	194	118	210	112	208	150	17*	11
SM-13	**200**	194	118	210	112	208	150	13*	12
SM-60	**250/300**	215	160	290	145	230	200	19*	17
SM-80	**350**	215	222	328	200	267	250	22*	38
SM-90	**400**	220	222	412	200	267	250	28*	42
SM-200	**450**	400	322	460	365	290	340	36*	60
SM-250	**500**	430	350	460	365	290	400	36*	65
SM-350	**600/650**	485	100	475	375	300	400	81*	90
SM-800	**700/750**	600	150	560	490	320	600	120*	130

* Other operation times on request.

- Selection made for **VAMEIN** valves working with water at ambient temperature at a maximum pressure of 10 Bar.
- References of selected actuators are only valid if the valve-actuator assembly is made by **VAMEIN DE ESPAÑA, S.A.**

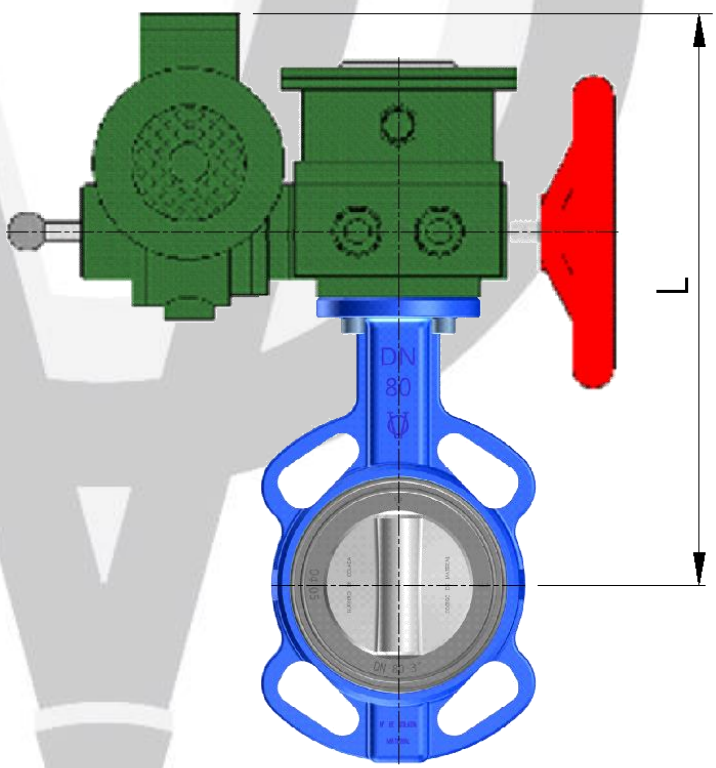

DN	Dimension "L"
50	348
65	360
80	367
100	386
125	399
150	411
200	453
250	505
300	545
350	574
400	609
450	680
500	715
600	832
650	850
700	893
750	942

Dimensions in mm.

VAMEIN DE ESPAÑA, S.A.
Calle Temple, 1 - 28760 - Tres Cantos
Madrid (ESPAÑA)
Phone. (+34) 91 803 45 17 – Email: comercial@vamein.es

3.6. ELECTRIC ACTUATOR VAU TYPE.

Features:

- Cast iron and aluminium made with high superficial protection against corrosion.
- Supply voltage: 220/380/400/415/440/460 and 500 V a.c. (3-phase) and 110-120/220-240 V a.c. (1-phase); 50 or 60 Hz.
- 2 SPDT limit switches operated by very accurate adjustable speedometer.
- 2 regulating limit torques (opening and close).
- Safety thermoblock contacts.
- Temperature range from –20ºC to +80ºC.
- Visual position indicator.
- Manual Emergency control with clutch (electrical priority).
- IP-67 protection.
- Regulation of turn-angle between 80º and 120º by means of mechanical stops.

Options:

- Superficial protection for especially corrosive atmosphere.
- 2 intermediate limit switches for intermediate positions.
- 4-20 mA electronic positioner.
- Anticondensation heating resistance.
- Versions for lower or higher ambient temperatures.
- IP-68 protection.
- Built-in switchboard.
- Antideflagration protections.

SG DIRECT MODEL FROM DN 50 TO DN 300:

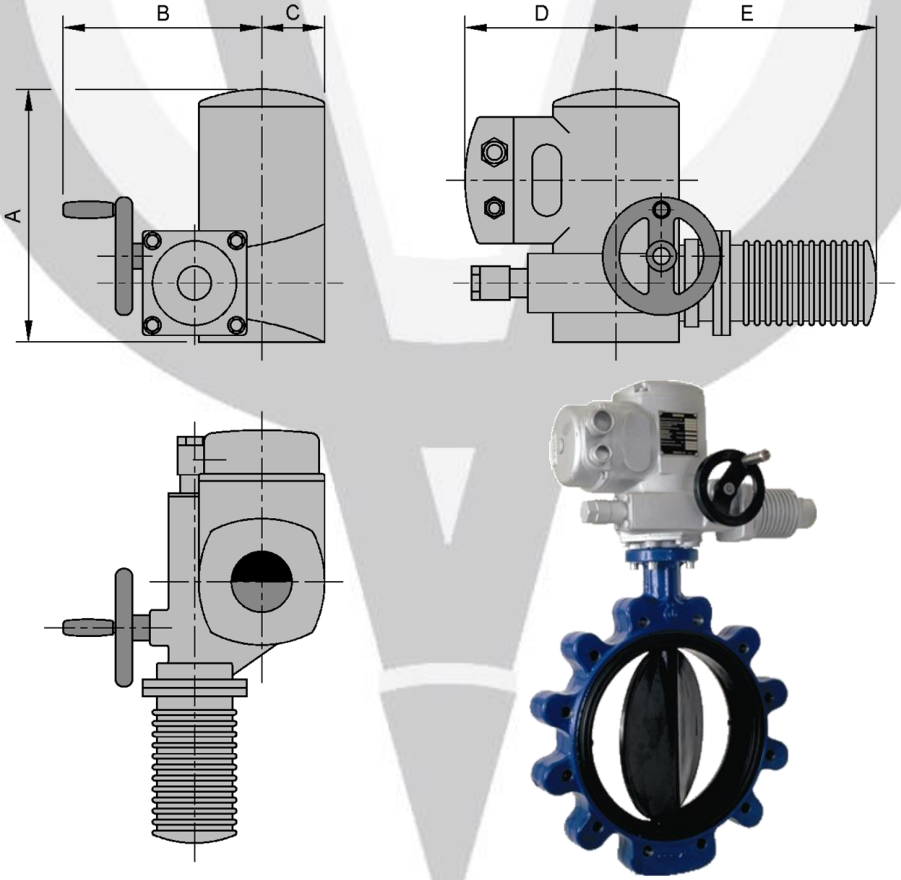

GEARBOX MOD. GS + GEARBOX MOD. Vz o Gz + MOTOR COMBINATION FROM DN 350

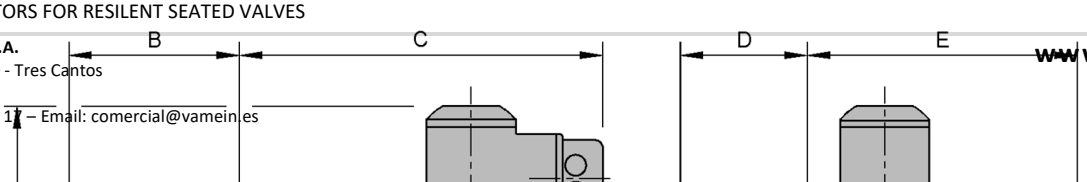

VAMEIN DE ESPAÑA, S.A.
Calle Temple, 1 - 28760 - Tres Cantos
Madrid (ESPAÑA)
Phone. (+34) 91 803 45 17 – Email: comercial@vamein.es
www.vamein.com

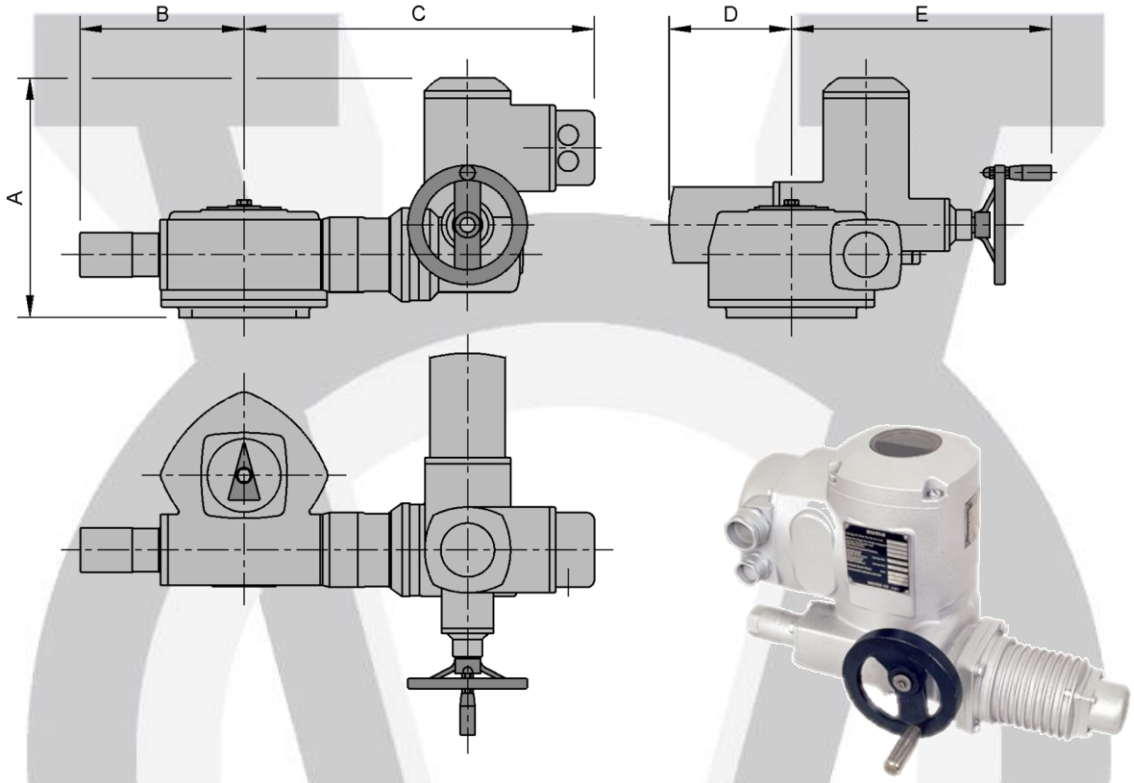

Dimensions of electric VAU actuators								
Reference	**DN Application**	**A**	**B**	**C**	**D**	**E**	**Operation Time (sec.)**	**Actuator Weight (Kg)**
SG-03.3	**50-80**	207	166	215	195	87	8 A 22	8,3
SG-04.3	**100-150**	207	166	215	195	87	8 A 32	8,3
SG-05.1	**200**	265	153	98	170	302	8 A 32	18
SG-07.1	**250/300**	265	153	98	170	302	8 A 32	18
GS 80 + SA-07.5.3	**350/400**	307	154	373	264	250	50 A 199	32,5
GS.100.3/Vz3.3 + SA-07.5	**450/500**	321	220	470	264	250	75 A 600	52
GS.125.3/Vz4.3 + SA-07.5	**600-700**	330	230	480	264	250	98 A 780	62
GS.160.3/Gz160.3 + SA-07.5	**750/800**	313	337	653	264	250	74 A 829	110
GS.160.3/Gz160.3 + SA-10.1	**900/1000**	323	337	655	282	256	72 A 814	110
GS.200.3/Gz200.3 + SA-10.1	**1050-1400**	348	398	735	282	256	104 A 810	189
GS.250.3/Gz250.3 + SA-10.1	**1500-2000**	381	486	817	282	256	102 A 795	327

- Selection made for **VAMEIN** valves working with water at ambient temperature at a maximum pressure of 10 Bar.
- References of selected actuators are only valid if the valve-actuator assembly is made by **VAMEIN DE ESPAÑA, S.A.**
- Dimensions of valves and electric actuators VAU type assemblies, refer to page no. 13.

VAMEIN DE ESPAÑA, S.A.
Calle Temple, 1 - 28760 - Tres Cantos
Madrid (ESPAÑA)
Phone. (+34) 91 803 45 17 – Email: comercial@vamein.es

3.7. ELECTRIC ACTUATOR VJ TYPE.

Features:

- Body and cover in thermoplastic material.
- 4 limit switches SPDT: 2 for motor stop and 2 for signalling.
- Supply voltage: 12/24/48/110 V d.c. and 12/24/48/110/220/240 V a.c. (1-phase).
- Temperature range from –10ºC to +50ºC.
- Visual position indicator.
- Manual Emergency Control with clutch.
- IP-65 protection.
- Time under voltage 35%.

Options:

- Body and cover of aluminium or stainless steel.
- 4-20 mA or 0-10 V positioners.
- Electronic limit torque.
- BSR safety block (equipped with rechargeable batteries).
- Anticondensation heating resistance.

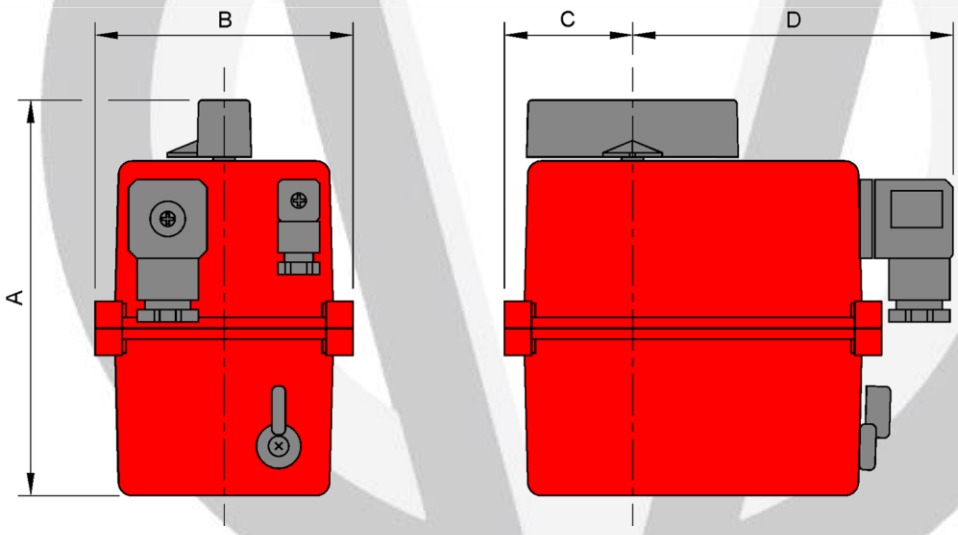

Selections and dimensions of electric VJ actuators							
Reference	**DN Aplicación**	**A**	**B**	**C**	**D**	**Operation Time (sec.)**	**Actuator Weight (Kg.)**
H 55	**50-125**	200	105	48	120	20*	1,8
H 140	**150/200**	247	200	93	123	20*	5,2
H 300	**250/300**	247	200	93	123	60*	5,2

- * Other operation times on request.
- For bigger DN, please consult.
- Selection made for **VAMEIN** valves working with water at ambient temperature at a maximum pressure of 10 Bar.
- References of selected actuators are only valid if the valve-actuator assembly is made by **VAMEIN DE ESPAÑA, S.A.**
- Dimensions of valves and electric actuators VJ type assemblies refer to next page.

VAMEIN DE ESPAÑA, S.A.
Calle Temple, 1 - 28760 - Tres Cantos
Madrid (ESPAÑA)
Phone. (+34) 91 803 45 17 – Email: comercial@vamein.es

3.8. DIMENSIONS OF VALVE ACTUATOR ASSEMBLIES.

Valve + Lever

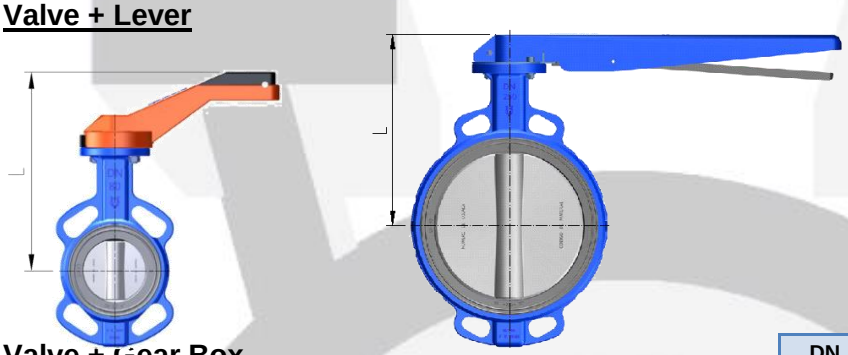

DN	Cota "L"
50	235
65	247
80	254
100	273
125	286
150	298
200	340
250	325
300	365

Valve + Gear Box

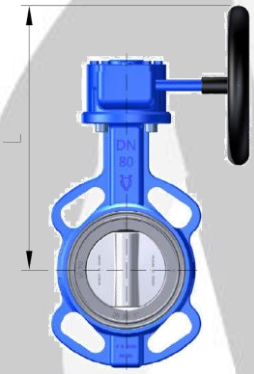

DN	Cota "L"	DN	Cota "L"
50	237	700	978
65	249	750	927
80	256	800	955
100	275	900	1066
125	288	1000	1114
150	300	1050	1140
200	342	1100	1159
250	429	1200	1424
300	469	1300	1441
350	498	1400	1485
400	534	1500	1612
450	635	1600	1687
500	673	1800	1797
600	937	2000	1907
650	855		

Valve + Electric Actuator VAU type

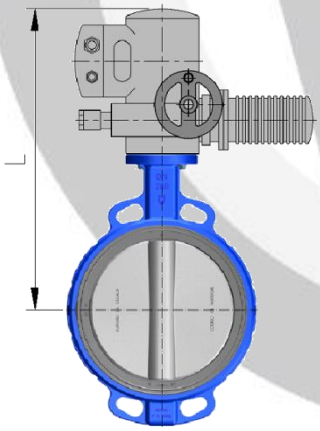

DN	Cota "L"	DN	Cota "L"
50	347	700	903
65	359	750	935
80	366	800	963
100	385	900	1030
125	398	1000	1078
150	410	1050	1129
200	510	1100	1123
250	540	1200	1248
300	580	1300	1354
350	614	1400	1398
400	649	1500	1506
450	708	1600	1581
500	746	1800	1691
600	862	2000	3492
650	880		

Valve + Electric Actuator VJ type

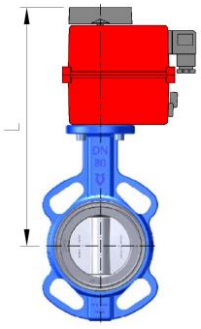

DN	Cota "L"
50	340
65	352
80	359
100	378
125	391
150	403
200	492
250	522
300	562

Dimensions in mm.

VAMEIN DE ESPAÑA, S.A.
Calle Temple, 1 - 28760 - Tres Cantos
Madrid (ESPAÑA)
Phone. (+34) 91 803 45 17 – Email: comercial@vamein.es

3.9. SPECIAL EXECUTIONS.

T-Wrench / Square nut

- Used in valves situated inside small chests.
- Operated by means of a crosshead wrench.

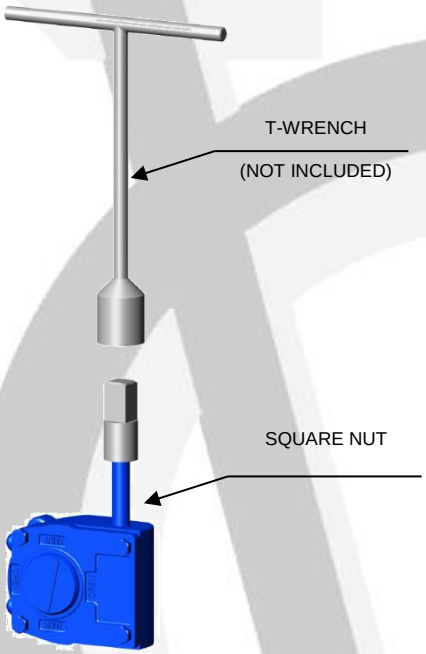

Operating column

- Used to operate buried, heat resistant valves or with any other type of insulation.

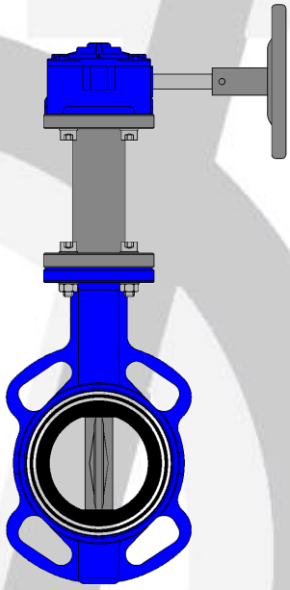

Extension spindle

- Used as replacement of the operating column in bigger sized valves and operated by gear box

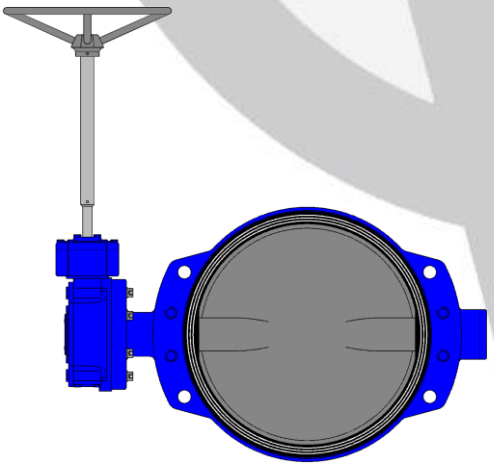

Chain-wheel

- Used to operate difficult access valves due to their elevated location

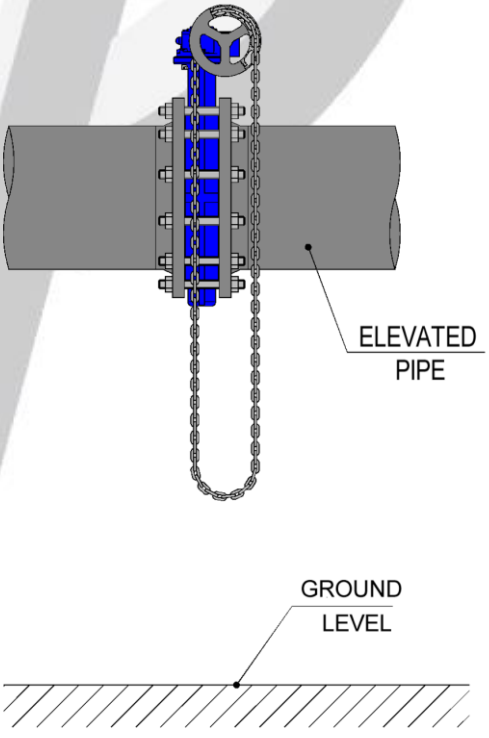

VAMEIN DE ESPAÑA, S.A.
Calle Temple, 1 - 28760 - Tres Cantos
Madrid (ESPAÑA)
Phone. (+34) 91 803 45 17 – Email: comercial@vamein.es

Pedestal and transmission bar by universal joints (cardan).

- Designed to operate valves situated at a lower level as the actuator.
- It can be used with any type of actuators or directly connected to the shaft end.

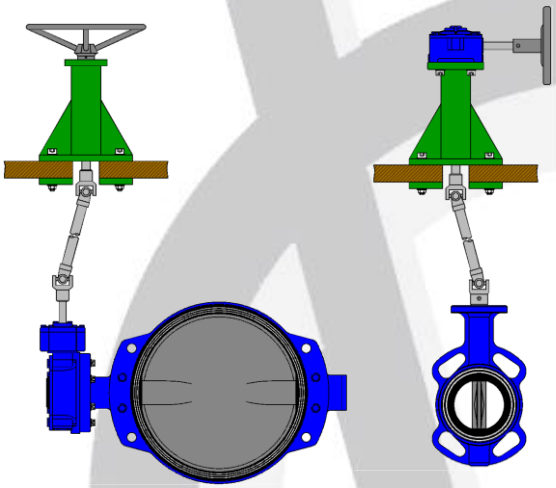

Control desk

- On request we prepare surveys and manufacture remote control desk on request to operate our valves in any type of installations.

Linked valves

- Two gearboxes with only one common handwheel can link two valves.

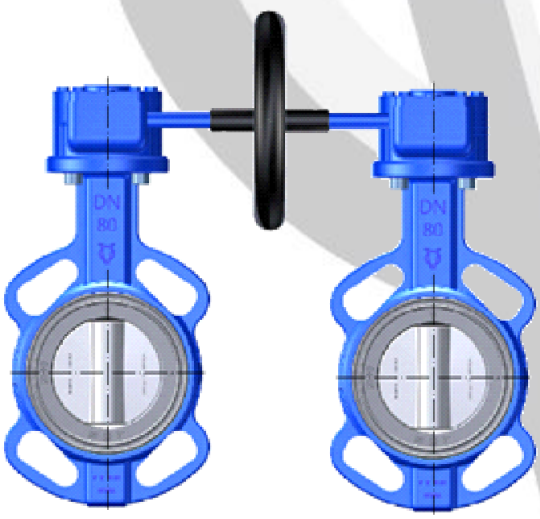

Multiposition lever

- Lever valid for control operations with infinite intermediate positions and blocking device. The device admits the blocking by means of a padlock at the open and close positions.

ACCESS HOLE
TO LEVER´S LOCKING SCREW
WITH TORSION SHAFT.
SCREW ONLY ACCESIBLE WITH
THE LEVER IN "CLOSED" POSITION.

Others

- Also on request Vamein de España, S.A. carries out any other type of special executions to adapt operation devices of its valves to the duties required by the installation and/or end customer.

VAMEIN DE ESPAÑA, S.A.
Calle Temple, 1 - 28760 - Tres Cantos
Madrid (ESPAÑA)
Phone. (+34) 91 803 45 17 – Email: comercial@vamein.es

4. MATERIAL SELECTION / KEY FIGURES / TORQUE TABLE FOR RESILENT SEATED VALVES.

4.1. MATERIAL SELECTION. ..... 1 to 14

4.2. VAMEIN BUTTERFLY VALVES OPTIONS AND ITS ACTUATORS. ..... 15 to 16

4.3. OPERATION TORQUE. ..... 17 to 21

4.1. MATERIAL SELECTION

The following material selection list has been made up based on our experience and customer's comments.

VAMEIN DE ESPAÑA, S.A. is confident that the recommended materials are valid for their appropriate selection.

You must take into account that there is a wide range of factors that come with each type of fluid and installation in the specific field, as well as other factors such as:

- Temperature.
- Concentration.
- Media velocity.
- Pressure.
- Suspended abrasive particles.
- Fluid conditions.
- Other hydraulic effects, etc.

Each of these factors can have severe effects on the material selected as many different combinations of the fluid components can also exist, as well as concentration, status and chemical composition of fluids.

Because of these many different combinations it is impossible to make up a table for the materials.

These reasons have lead **VAMEIN DE ESPAÑA, S.A.** to point out the following:

Vamein de España, S.A. will not guarantee and will assume no responsibility for the behavior of the materials recommended by our commercial Personnel or our literature as there are innumerable factors that might combine in each particular workplace. Only the customer and his Technical Department will be responsible for the material selection affected.

Vamein de España, S.A. can neither guarantee the exactness of the material selection tables nor assume any responsibility for their use. When doubting, it is better to test first.

VAMEIN DE ESPAÑA, S.A.
Calle Temple, 1 - 28760 - Tres Cantos
Madrid (ESPAÑA)
Phone. (+34) 91 803 45 17 – Email: comercial@vamein.es

4.1.1. INTRODUCTION TO THE MATERIAL SELECTION TABLE.

PHYSICAL STATE: This part deals with the physical state of the corrosive fluid to flow, taking into account that the table's columns where the fluids condition is not stated, it will be assumed that the concentration level is between 0 - 100 % and the maximum work temperature will be related to the chosen seat (see chapter I, page 27).

G = GAS

L = LIQUID

S = SOLID

You must take into account that most solids flow in form of solutions and only a few, such as cement, plaster, caustic soda, sugar, flour, sand, etc, are driven as solids.

For Ductile Iron discs with a RILSAN® coating, you must not exceed the following temperatures for continuous service: max. 80º C, min. -40º C. If driving at temperatures higher than 80º C, it is advisable to use Ductile Iron discs with KATAPHORESIS coating, or else Stainless Steel, Bronze and Aluminium Bronze discs, among others.

The selections marked on the tables, have been made taking into account the most economic materials tough enough to resist the fluid to be used, and they are identified according to the following abbreviations depending on their behavior.

E.- RECOMMENDED. Based on our own experience and the recommendations made by suppliers, this material gathers all the necessary conditions regarding quality and price.

A.- GOOD. Based on our own experience with the features of the materials and the recommendations of our suppliers.

B.- AVERAGE. It can be used depending on the application, such as concentration and temperature. It is advisable to undertake some tests, before using it on a large scale.

N.- NOT USABLE. We do not recommend its use.

The **VAMEIN** valve system, with the seat wrapped around the body and a centered shaft, ensures that only the seat and the disc are in contact with the fluid. This is why the table for the selection of materials only deals with these two components of the valve.

VAMEIN DE ESPAÑA, S.A.
Calle Temple, 1 - 28760 - Tres Cantos
Madrid (ESPAÑA)
Phone. (+34) 91 803 45 17 – Email: comercial@vamein.es

4.1.2. MATERIAL SELECTION TABLE.

FLUID	PHYSICAL STATE	DISC MATERIALS				SEAT MATERIALS						
		CONDITION	DUCTLE IRON. (EN 1563)	ALUMINUM BRONZE. (EN 1982)	STAINLESS STEEL. (EN 10213-4)	CONDITION	EPDM	BUNA-N	HYPALON	NEOPRENE	VITON®	SILICONE
ACETALDEHYDE	L	<25°C	N	A	A		E	N	N	N	N	
ACETIC ACID	L	<50%	N	N	E	<30% <95°C	E	N	A	A	N	B
ACETIC ACID-GLACIAL	L		N	B	B		N	N	A	N	N	
ACETIC ANHYDRIDE	L		N	N	E	<28°C	B	N	A	A	N	
ACETONE	L	<25°C	E	A	A		A	N	B	B	N	N
ACETYLENE	G	<25°C	E	N	A	<70°C	E		B	B	A	
ACETYLENE (DRY)	G		B	N	A		B				A	
AIR	G		E	A	A		E	A		A	A	
ALUMINUM CHLORIDE	S		N	N	N	<25% <70°C	E	A	A	A	A	
ALUMINUM FLUORIDE	S					<25°C	E	A			A	
ALUMINUM HYDROXIDE	S		N	A	A		E	A	A	A	A	
ALUMINUM SULFATE	S	<25% <65°C	N	N	A	<40°C	A	A	A	A	A	
AMMONIA, ANHYDROUS	G		B	N	E		N	B	B	A	N	
AMMONIA, LIQUID	L			N	E		E	B				A
AMMONIUM BICARBONATE	S		E	N	A		A	A			A	
AMMONIUM CHLORIDE	S		N	N	N	<25% <65°C	A	A	A	A	A	
AMMONIUM HYDROXIDE	L		N	N	A	<40°C	A	N	A	A	A	A
AMMONIUM NITRATE	S	<25% <65°C	N	N	A	<70°C	A	B		A	A	

VAMEIN DE ESPAÑA, S.A.
Calle Temple, 1 - 28760 - Tres Cantos
Madrid (ESPAÑA)
Phone. (+34) 91 803 45 17 – Email: comercial@vamein.es

FLUID	PHYSICAL STATE	DISC MATERIALS				SEAT MATERIALS						
		CONDITION	DUCTLE IRON. (EN 1563)	ALUMINUM BRONZE. (EN 1982)	STAINLESS STEEL. (EN 10213-4)	CONDITION	EPDM	BUNA-N	HYPALON	NEOPRENE	VITON®	SILICONE
AMMONIUM PHOSPHATE	S	<25% <65°C	N	N	E	<80°C	A	B		A	A	
AMMONIUM SULFATE	S	<25% <65°C	N	N	A	<40°C	A	A	A	A	A	
AMYL ACETATE	L		N	B	A		E	N	N	N	N	
AMYL ALCOHOL	L		N	A	A		E	B	A	A	A	
ANTIMONY TRICHLORIDE	L		N	N	N					B		
ARSENIC ACID	S		N	N	E		E	A		B		
ASPHALT	L	<25°C	E	A	A	<70°C	N	A	B	B	A	
BARIUM CARBONATE	S			B	A		E	B			A	
BARIUM HYDROXIDE	S	<50% <25°C	B	N	A	<70°C	E	A	A	A	A	
BARIUM SULFATE	S		B	A	A		E	A			A	
BARIUM SULFIDE	S	<25% <65°C	N	N	A		E	A			A	
BEER-BREWERIES	L		N	N	A		E	A	A	A	A	A
BEET SUGAR LIQUORS	L		N	A	A		A	A			A	
BENZALDEHYDE	L	<25°C	E	A	A	<28°C	E	N	N	N	N	
BENZENE	L		A	A	A		N	N	N	N	B	N
BENZENE SULFONIC ACID	S	<50%		E	B	<100	A	N				
BENZOIC ACID	L		N	A	A		N	N			B	
BORIC ACID	S	<40°C	N	A	A	<70°C	E	A	A	A	A	
BROMINE ANHYDROUS	S		N	N	N		N	N	B	N	B	
BUTANE	G		B	A	A	<25°C	N	E	A	A	A	
BUTTER	L		N	N	A		B	A				A

VAMEIN DE ESPAÑA, S.A.
Calle Temple, 1 - 28760 - Tres Cantos
Madrid (ESPAÑA)
Phone. (+34) 91 803 45 17 – Email: comercial@vamein.es

FLUID	PHYSICAL STATE	DISC MATERIALS				SEAT MATERIALS						
		CONDITION	DUCTLE IRON. (EN 1563)	ALUMINUM BRONZE. (EN 1982)	STAINLESS STEEL. (EN 10213-4)	CONDITION	EPDM	BUNA-N	HYPALON	NEOPRENE	VITON®	SILICONE
BUTYL ALCOHOL	L	<25°C		A	A	<28°C	B	E		B	A	N
BUTYRALDEHYDE	L		N	N	E		B	N	N	N	N	
BUTYRIC ACID	L	<5% <65°C	N		E	<30% <40°C	N	B	N	N		
CALCIUM BISULFITE	L		N	N	A	<70°C	N	E	A	A	A	
CALCIUM CHLORIDE	S	<25% <65°C	N	A	B	<70°C	A	A	A	A	A	
CALCIUM HYDROXIDE (LIME)	S	<25°C	N	A	A		A	A	A	A	A	B
CALCIUM HYPOCHLORITE	S	<25% <66°C	N	N	N	<25% <21°C	A	N	A	B	B	
CALCIUM SULFATE	S	<10% <25°C	N	B	A		A	A			A	
CARBON BISULFIDE	L		N	N	E		N	N	N	N	A	
CARBON DIOXIDE- (GAS, DRY)	G		E	A	A		E	A		A	A	
CARBON DIOXIDE-(LIQUID, WET)	L		N	N	A		E	A	A	A	A	
CARBON MONOXIDE	G	<40°C	E	A	A	<40°C	E	A	A	A		
CARBON TETRACHLORIDE	L	<25°C	N	A	E		N	N	N	N	A	N
CARBONIC ACID	L		N	N	A		A	E		A	A	
CHLORINATED SOLVENTS	L		N	N	B		N	N	B	N	B	
CHLORINE (WET or DRY)	L		N	N	N		A	N	B	B	A	
CHLOROACETIC ACID	S		N	N	N	<25% <70°C	E	N	A	A	N	
CHLOROBENZENO	L		N	A	A		N	N	N	N	A	
CHLOROBROMOMETHANE	L						B	N				N
CHLOROFORM	L		N	A	E		N	N	N	N	A	N

VAMEIN DE ESPAÑA, S.A.
Calle Temple, 1 - 28760 - Tres Cantos
Madrid (ESPAÑA)
Phone. (+34) 91 803 45 17 – Email: comercial@vamein.es

FLUID	PHYSICAL STATE	DISC MATERIALS				SEAT MATERIALS						
		CONDITION	DUCTLE IRON. (EN 1563)	ALUMINUM BRONZE. (EN 1982)	STAINLESS STEEL. (EN 10213-4)	CONDITION	EPDM	BUNA-N	HYPALON	NEOPRENE	VITON®	SILICONE
CHLOROSULFONIC ACID (WET or DRY)	L		N	N	N		N	N	N	N	N	
CHROMIC ACID	L	<50% <20°C	N	N	B		N	N	A	N	A	
CITRIC ACID	S	<40°C	N	B	A		E	A	A	A	A	
COFFEE (DRY or WET)	S		N	A	A		E	A				A
COLA SYRUP	L		N	N	E		E	B				A
COPPER CHLORIDE (DRY)	S		N	N	N	<80°C	E	A	A	A	A	
COPPER NITRATE	S	<5% <25°C	N	N	E		E	A			A	
COPPER SULFATE	S	<10% <99°C	N	N	B		E	A	A	A	A	N
CYCLOHEXANE	L	<25°C	A	A	A		N	B	N	N	A	N
DIACETONE ALCOHOL	L	<40°C	A	A	A		E	N				B
DIBUTYL PHTHALATE	L				E	<60°C	E	N	N	N	B	A
DIBUTYL SEBACATE	L				E		B	N				A
DIETHYL ETHER	L				E		N	N				N
DIETHYL SEBACATE	L				E		B	N	B	N	B	B
DIOCTYL PHTHALATE	L				A		B	N	N	N	B	B
ETHYL ACETATE	L		N	A	A		N	N	N	N		
ETHYL ALCOHOL	L		N	A	A	<80°C	E	A	A	A	A	A
ETHYL CHLORIDE (DRY)	G		B	B	A		E	B	N	N	A	
ETHYL ETHER	L		N	A	E		N	N	N	N	N	N
ETHYLENE DICHLORIDE	L		N	N	B		N	N	N	N	A	N
ETHYLENE GLICOL	L	<40°C	E	A	A		E	A	A	A	A	A

VAMEIN DE ESPAÑA, S.A.
Calle Temple, 1 - 28760 - Tres Cantos
Madrid (ESPAÑA)
Phone. (+34) 91 803 45 17 – Email: comercial@vamein.es

FLUID	PHYSICAL STATE	DISC MATERIALS				SEAT MATERIALS						
		CONDITION	DUCTLE IRON. (EN 1563)	ALUMINUM BRONZE. (EN 1982)	STAINLESS STEEL. (EN 10213-4)	CONDITION	EPDM	BUNA-N	HYPALON	NEOPRENE	VITON®	SILICONE
ETHYLENE OXIDE	G	<12°C	B	N	A		A	N	N	N	N	N
FERRIC CHLORIDE	S	<25% <65°C	N	N	N	<25% <95°C	A	B	A	A	A	A
FORMALDEHYDE	G	<40% <99°C	N	B	A	<40%	E	N	A	A	A	
FORMIC ACID	L	<90% <99°C	N	A	E	<60%	N	N	A	A	B	
FREON 11	G		N	E	A	<20°C	N	E	A	A	A	N
FREON 11	G						N	B		B		N
FREON 12	G		N	E	A		B	E	A	A	A	N
FREON 13	G		N	E	A		B	E				N
FREON 13B1	G		N	E	A		B	E				N
FURFURAL	L	<40°C	N	A	E		A	N	B	B	B	
GASOLINE REGULAR	L		B	A	A	<30°C	N	E	B	B	A	
GELATINE	S		N	A	A		E	A	A		A	A
GLUCOSE	L			A	A		E	A	A		A	A
GLUE	L			E	A		E	A	A	A	A	
GLYCERINE	L	<40°C	B	A	A		E	A	A	A	A	
GLYCOLS	L		E	A	A		E	A	A		A	A
HEPTANE	L		A	A	A	<20°C	N	E	B	B	A	B
HEXANE	L	<99% <25°C	A	A	A		N	A	A	A	A	
HYDROCHLORIC ACID	L			N	N	<20% <110C	E	B	A	A	A	B
HYDROCHLORIC ACID	L					<37% <70°C			A	A	A	

VAMEIN DE ESPAÑA, S.A.
Calle Temple, 1 - 28760 - Tres Cantos
Madrid (ESPAÑA)
Phone. (+34) 91 803 45 17 – Email: comercial@vamein.es

FLUID	PHYSICAL STATE	DISC MATERIALS				SEAT MATERIALS						
		CONDITION	DUCTLE IRON. (EN 1563)	ALUMINUM BRONZE. (EN 1982)	STAINLESS STEEL. (EN 10213-4)	CONDITION	EPDM	BUNA-N	HYPALON	NEOPRENE	VITON®	SILICONE
HYDROCYANIC ACID	L		N	N	A	<25°C	A	N	A	A	A	
HYDROFLUORIC ACID	L	<15%	N	N	N	<48% <70°C	B	N	A	A	A	
HYDROFLUORIC ACID	L					<75% <70°C	N	N	A	B	B	
HYDROGEN GAS	G		E	A	A		E	A	A	A	A	
HYDROGEN PEROXIDE	L	<25°C	N	N	E	<90*%	E	N	A	B	A	B
HYDROGEN SULFIDE	G	<25°C	N	N	E		E	N	A	A	B	
ISOBUTYL ALCOHOL	L				A	<70°C	E	A	A		A	A
ISOPROPYL ALCOHOL	L		E	A	A		E	B	A	A	A	A
ISOPROPYL ETHER	L		A	A	E		N	B	B	N	N	
KEROSENE	L	<25°C	E	A	A		N	E	B	N	A	B
KEROSENE	L		N	A	A		N		N	N	B	
LACQUER SOLVENTS	L		A	A	E		N	N	N	N	N	
LACTIC ACID	L		N	N	A		E	N	A	A	A	A
LARD	L		N	A	A		N	E			A	B
MAGNESIUM CHLORIDE	S		N	N	B	<80°C	E	A	A	A	A	
MAGNESIUM HYDROXIDE	S		N	A	A		E	B	A	A	A	
MAGNESIUM SULFATE	S	<25% <65°C	N	A	A	<80°C	E	A			A	
MALEIC ACID	S		N	N	A		A	N			A	
MERCURIC CHLORIDE	L		N	N	N	<10% <40°C	E	A	A	A	A	
MERCURIC CYANIDE	S		N	N	B			B			A	
MERCURY	L		N	N	A		A	E	A	A	A	

VAMEIN DE ESPAÑA, S.A.
Calle Temple, 1 - 28760 - Tres Cantos
Madrid (ESPAÑA)
Phone. (+34) 91 803 45 17 – Email: comercial@vamein.es

FLUID	PHYSICAL STATE	DISC MATERIALS				SEAT MATERIALS						
		CONDITION	DUCTLE IRON. (EN 1563)	ALUMINUM BRONZE. (EN 1982)	STAINLESS STEEL. (EN 10213-4)	CONDITION	EPDM	BUNA-N	HYPALON	NEOPRENE	VITON®	SILICONE
METHANE	G			A	A		N	E	A		A	A
METHYL ALCOHOL	L	<25%	B	A	A		E	B	A	A	B	A
METHYL CHLORIDE	G		N	A	E		N	N				N
METHYL ETHYL KETONE	L	100% <25°C	E	A	A		E	N	N	N	N	
METHYL METHACRYLATE	L				E		N	N				N
MILK	L		N	A	A		B	B				A
MOLASSES	L		N	B	A		E	A			A	
MONOCHLOROBENZENE (DRY)	L		A	A	E		N	N				N
MURIATIC ACID	L	<50%	N	N	N		N	N		B		
NAPHTHA	L		A	A	A		N	N	N	N	A	
NAPHTHALENE	S		N	A	A		N	N	N	N	A	
NATURAL ALCOHOL	L			A	A		N	N			A	
NICKEL CHLORIDE	S		N	N	B		E	A			A	
NICKEL NITRATE	S		N	N	A			B			A	
NICKEL SULFATE	S	<25% <65°C		N	B	<80°C	A	A			A	
NITRIC ACID	L	<5%	N	N	E	<10%	E	B	A	B	A	B
NITRIC ACID	L	<40% <95°C	N	N	E	<30%	N	N	A	N	A	
NITRIC ACID	L	<80% <40°C	N	N	E	<60%	N		B	N	A	
NITRIC ACID	L	<95% <25°C	N	N	E	<70%	N		N	N	A	
NITROBENZENE	S		B	N	A		A	N	N	N	B	

VAMEIN DE ESPAÑA, S.A.
Calle Temple, 1 - 28760 - Tres Cantos
Madrid (ESPAÑA)
Phone. (+34) 91 803 45 17 – Email: comercial@vamein.es

FLUID	PHYSICAL STATE	DISC MATERIALS				SEAT MATERIALS						
		CONDITION	DUCTLE IRON. (EN 1563)	ALUMINUM BRONZE. (EN 1982)	STAINLESS STEEL. (EN 10213-4)	CONDITION	EPDM	BUNA-N	HYPALON	NEOPRENE	VITON®	SILICONE
OIL - ANILINE	L		N	N	E		N	N			B	
OIL - ANIMAL	L		E	B	A		N	E			A	
OIL - CASTOR	L			A	A		B	E			A	
OIL - CHINA WOOD	L			A	A		B	E			A	
OIL - COCONUT	L		N	N	A		B	E			A	
OIL - CREOSOTE	L		E	A	A		N	N			A	
OIL - CRUDE (SWEET)	L		A	A	A		N	E			A	
OIL - CRUDE (SOUR)	L		B	E	A		N	A			A	
OIL - FISH	L			N	A		N	E			A	
OIL - FUEL	L		B	A	A		N	E			A	
OIL - LINSEED	L		E	A	A		N	E	A	A	A	
OIL - LUBRICATING (PETROLEUM)	L		E	A	A		N	E			A	
OIL - HYDRAULIC (PETROLEUM BASE)	L		E	A	A		N	E			A	
OIL - HYDRAULIC (WATER BASE)	L		E	A	A			E			A	
OIL - MINERAL	L		B	A	A		N	E			A	N
OIL - MOTOR	L		E	A	A		N	E			A	
OIL - OLIVE	L		N	B	A		B	E		N	A	B
OIL - PALM	L			B	A		N	E			A	
OIL - SILICONE	L		E	A	A		A	E			A	
OIL - SOYBEAN	L			B	A		N	E			A	
OIL - TALL	L			E	A		N	E			A	
OIL - TRANSFORMER	L		E	A	A		N	E			A	

VAMEIN DE ESPAÑA, S.A.
Calle Temple, 1 - 28760 - Tres Cantos
Madrid (ESPAÑA)
Phone. (+34) 91 803 45 17 – Email: comercial@vamein.es

FLUID	PHYSICAL STATE	DISC MATERIALS				SEAT MATERIALS						
		CONDITION	DUCTLE IRON. (EN 1563)	ALUMINUM BRONZE. (EN 1982)	STAINLESS STEEL. (EN 10213-4)	CONDITION	EPDM	BUNA-N	HYPALON	NEOPRENE	VITON®	SILICONE
OIL - TURBINE	L		E	A	A		N	E			A	
OIL - VEGETABLE	L		N	B	A		N	E			A	B
OLEIC ACID	L		N	A	A		B	B	B	B	B	
OLEUM	L		N	N	E	<25%	N	N	B	N	A	
OXYGEN - GAS	G		E	A	A		E	B			A	
OZONE (DRY-WET)	G		N		E		A	N	A		A	
PALMITIC ACID	S		B	N	E		N	E	B	B	A	
PARAFFIN	S			A	A			E			A	B
PENTANE	G		E	A	A			E			A	
PERCHLORETHYLENE	L	<40°C	A	A	A		N	N	N	N	A	
PHOSPHORIC ACID	L	<40% <95°C	N	N	E	<20%	E	B	A	A	A	N
PHOSPHORIC ACID	L	<50°C	N	N	E	<60%	B	N	A	A	A	
PHOSPHORIC ACID	L		N	N	B	<70%-85%	A		A	A	A	N
PICRIC ACID-AQUEOUS	L	<65°C	N	N	E	<20°C	E	N	A	A	A	
POTASSIUM BICARBONATE	S			A	A		E	B			A	
POTASSIUM BROMIDE	S		N	N	N		A	N			A	
POTASSIUM HYDROXIDE	L	<50% <40°C		N	A	<80°C	E	B	A	A	A	B
POTASSIUM SULFATE	S		N	A	A		E	A			A	
POTASSIUM SULFIDE	S		N	N	A		B	N			A	
PROPANE	G	<25°C	E	A	A		N	E			A	
RESINS	L		A	A	A		N	N			A	
SALICYLIC ACID	S		N	A	A		E	A			A	

VAMEIN DE ESPAÑA, S.A.
Calle Temple, 1 - 28760 - Tres Cantos
Madrid (ESPAÑA)
Phone. (+34) 91 803 45 17 – Email: comercial@vamein.es

FLUID	PHYSICAL STATE	DISC MATERIALS				SEAT MATERIALS						
		CONDITION	DUCTLE IRON. (EN 1563)	ALUMINUM BRONZE. (EN 1982)	STAINLESS STEEL. (EN 10213-4)	CONDITION	EPDM	BUNA-N	HYPALON	NEOPRENE	VITON®	SILICONE
SALINA SOLUTIONS	L		N	B	A						A	
SILVER NITRATE	S	<60% <25°C	N	N	E	<75% <70°C	E	B			A	
SOAP SOLUTIONS	L		B	A	A		E	A	A	A	A	
SODIUM ACETATE	S		N	E	A		E	B			A	
SODIUM ALUMINATE	S		B	A	A		N	E			A	
SODIUM BICHROMATE SOLUTION	L				E		E	A			A	
SODIUM BORATE (BORAX)	S		N	A	A		E	B			A	
SODIUM BROMIDE	S		N	N	N		N	N			A	
SODIUM CARBONATE	S		N	N	A		E	A			A	A
SODIUM CHLORATE	S		N	N	E		A	B			A	
SODIUM CHLORIDE	S		N	N	N	<55°C	E	A	A	A	A	
SODIUM CYANIDE	S		N	N	A		E	A			A	
SODIUM DICHROMATE	S			N	E	<20%	E	B	A	B	A	
SODIUM FLUORIDE	S		N	B	E		A	B			A	
SODIUM HYDROXIDE (LYE, CAUSTIC SODA)	L	<50% <40°C	N	N	A		E	B				A
SODIUM HYPOCHLORITE	S	<3%	N	N	N	<5%	E	B	A	A	A	
SODIUM PERBORATE	S	<10% <20°C	N	N	A	<10% <99°C	E	A			A	
SODIUM PEROXIDE	S	<99°C	N	N	E	<10% <50°C	E	N	A	A	A	
SODIUM SULFATE	S		N	A	A						A	
SODIUM SULFIDE	S	<25°C	N	N	A		E	A			A	
SODIUM THIOSULFATE	S		N	N	E		E	A			A	

VAMEIN DE ESPAÑA, S.A.
Calle Temple, 1 - 28760 - Tres Cantos
Madrid (ESPAÑA)
Phone. (+34) 91 803 45 17 – Email: comercial@vamein.es

FLUID	PHYSICAL STATE	DISC MATERIALS				SEAT MATERIALS						
		CONDITION	DUCTLE IRON. (EN 1563)	ALUMINUM BRONZE. (EN 1982)	STAINLESS STEEL. (EN 10213-4)	CONDITION	EPDM	BUNA-N	HYPALON	NEOPRENE	VITON®	SILICONE
STANNIC CHLORIDE	L		N	N	N		B	E	B	B	A	
STEAM AND HOT WATER	L	<120C	N	N	A	<120C	A	N	A	A	B	B
STEARIC ACID	S		N	N	A	<70°C	N	A	B	B	B	N
STYRENE	L		A	A	A		N	N	N	N	A	
SULFUR DIOXIDE (DRY)	G		E	A	A		E	A	A	A	B	A
SULFUR DIOXIDE (WET)	G		N	N	E		A	N	A	A	B	B
SULFUR TRIOXIDE (DRY)	S		E	A	A	<50°C	E	N	N	N	B	
SULFURIC ACID	L	<20% <20°C	N	N	A	<10% <20°C	E	N	A	A	A	B
SULFURIC ACID	L	<80% <20°C	N	N	B	80% <20°C	N	N	A	B	A	
SULFURIC ACID	L	<95% <20°C	N	N	B	<90% <20°C	N	N	A	N	A	N
SULFURIC ACID COLLYRIC	L		N	N	A		N	N	N	N	A	
SULFUROUS ACID	L		N	N	B		N	N	A	N	N	
TANNIC ACID (TANNIN)	S		B	E	A	<10%	E	B	A	A	A	
TAR	S		A	A	A		N	B			A	B
TARTARIC ACID	S	<15%	N	B	A	<10% <100°C	B	E	A	A	A	
TETRAHYDROFURAN	L	<40°C		A	A		N		N	N	N	N
TOLUENE	L		A	A	A		N	N	N	N	B	N
TRIBUTYL PHOSPHATE	L				E		E	N	N	N	N	
TRICHLOROACETIC ACID	S			N	N	<10% <40°C	B	B			A	
TRICHLOROETHANE	L		N				N	N			A	
TRICHLOROETHYLENE	L	<25°C	N	N	A		N	N	N	N	A	N

VAMEIN DE ESPAÑA, S.A.
Calle Temple, 1 - 28760 - Tres Cantos
Madrid (ESPAÑA)
Phone. (+34) 91 803 45 17 – Email: comercial@vamein.es

FLUID	PHYSICAL STATE	DISC MATERIALS				SEAT MATERIALS						
		CONDITION	DUCTLE IRON. (EN 1563)	ALUMINUM BRONZE. (EN 1982)	STAINLESS STEEL. (EN 10213-4)	CONDITION	EPDM	BUNA-N	HYPALON	NEOPRENE	VITON®	SILICONE
TRICRESYL PHOSPHATE	L		B	N			E	N	N	N	A	
TRIETHANOL AMINE	L		B	E			A	E	A	A	N	
TRISODIUM PHOSPHATE	L				A		A	B	A	A	A	
TURPENTINE	L		N	E	A	<25°C	N	E	N	N	A	
UREA	S	<40°C	N	N	A		E	A			N	
VINEGAR	L		N	N	A		E	B				A
WATER, ACIDIC MINE	L		N	N	B		E	A				B
WATER, FRESH	L		N	A	A		E	A		A	A	
WHISKEY	L		N	N	A		E	B				A
XYLENE	L		B	A	A		N	N	N	N	B	N
ZINC CHLORIDE	S		N	N	N		E	A	A	A	A	
ZINC SULFATE	S		N	N	A		E	A			A	

VAMEIN DE ESPAÑA, S.A.
Calle Temple, 1 - 28760 - Tres Cantos
Madrid (ESPAÑA)
Phone. (+34) 91 803 45 17 – Email: comercial@vamein.es

4.2. "VAMEIN" BUTTERFLY VALVES OPTIONS AND ITS ACTUATORS.

To speed up the orders and to avoid possible errors, please use the following code:

BODY TYPE			
1	2		5
WAFER	FLANGED		LUG
BODY MATERIALS			
GENERIC	**ASTM STANDARD**	**DIN / EN STANDARD**	**COATING**
1. Ductile Iron	A395/A395M-99	EN-JS 1020 EN 1563	RILSAN-EPOXY (1)
2. Cast Steel	A216-14E1 Gr. WCB	1.0619 EN 10213-2	RILSAN-EPOXY (1)
3. Aluminium Bronze	B148-14 C95800	EN 1982-99 CC333G	No coating
4. Stainless Steel 18/8	A351/A351M-15 Gr. CF8	1.4308 EN 10213-4	No coating
5. Stainless Steel 18/8/2	351/A351M-15 Gr. CF8M	1.4408 EN 10213-4	No coating
6. Aluminium	B 179 S12C	1706 AC44100	RILSAN
9. Bronze	B 62-15 C83600	CC491K EN1982	No coating
(1): Rilsan® DN 50 to 300 and Epoxy as from DN 350.			
DISC MATERIALS			
GENERIC	**ASTM STANDARD**	**DIN / EN STANDARD**	**COATING**
1. Ductile Iron	A395/A395M-99	EN-JS 1020 EN 1563	EPOXY
2. Cast Steel	A216-14E1 Gr. WCB	1.0619 EN 10213-2	EPOXY
3. Aluminium Bronze	B148-14 C95800	EN 1982-99 CC333G	No coating
4. Stainless Steel 18/8	A351/A351M-15 Gr. CF8	1.4308 EN 10213-4	No coating
5. Stainless Steel 18/8/2	351/A351M-15 Gr. CF8M	1.4408 EN 10213-4	No coating
6. Ductile Iron	A395/A395M-99	EN-JS 1020 EN 1563	(2)
7. Ductile Iron	A395/A395M-99	EN-JS 1020 EN 1563	RILSÁN
8. Cast Steel	A216-14E1 Gr. WCB	1.0619 EN 10213-2	RILSAN
9. Bronze	B 62-15 C83600	CC491K EN1982	No coating
(2): Special coatings required by customer.			

ACTUATORS							
P	**RS**	**MF**	**ND**	**NS**	**SE**	**HD**	**HS**
Lever	Gear Box	Tee square operator	Double acting pneumatic actuator	Spring return pneumatic actuator	Electric actuator	Double acting hydraulic actuator	Spring return hydraulic actuator

SEAT MATERIALS												
B	**E**	**H**	**N**	**NA**	**NE**	**S**	**V**	**NB**	**CB**	**CA**	**EC**	**EA**
Butyl	EPDM	Hypalon	NBR	Natural rubber	Neoprene	Silicon	Viton®	White NBR	Natural rubber food-grade	Anti-abrasive natural rubber	High temperature EPDM	Non toxic EPDM

Note: For materials, coatings or actuators other than those listed above, please contact our Technical Department

VAMEIN DE ESPAÑA, S.A.
Calle Temple, 1 - 28760 - Tres Cantos
Madrid (ESPAÑA)
Phone. (+34) 91 803 45 17 – Email: comercial@vamein.es

4.2.1. EXAMPLE ON HOW TO USE THE CODE.

	A	B	C	D	E	DN	PN
CODE	5	1	5	RS	E	0200	16

- This is a **VAMEIN** butterfly valve with the following features:
- **A** - LUG type. 500 series.
- **B** - Ductile Iron Body ASTM A 395.
- **C** - Stainless Steel Disc 18/8/2 ASTM A 351 Gr.CF.8M (AISI-316).
- **D** - Gear Box actuator.
- **E** - EPDM seat
- **DN** – Nominal Diameter of valve
- **PN** – Nominal Pressure.

Vamein de España, S.A. will not guarantee and will assume no responsibility for the behavior of the materials recommended by our commercial Personnel or our literature as there are innumerable factors that might combine in each particular workplace. Only the customer, the Technical Department of the project and/or Consultant is responsible for their selection. In case of doubts, we suggest a trial first.

VAMEIN DE ESPAÑA, S.A.
Calle Temple, 1 - 28760 - Tres Cantos
Madrid (ESPAÑA)
Phone. (+34) 91 803 45 17 – Email: comercial@vamein.es

4.3. OPERATION TORQUE.

The flow of a liquid through a partially open butterfly valve disc creates a force on the disc which tends to close it; this is called "Dynamic Torque". For valves smaller than DN-150 mm (6") this dynamic torque usually does not have an important effect.

For valves starting from DN-200 mm (8"), the Dynamic Torque must be taken into account when choosing the actuators. This is why manual actuators are recommended for valves starting from this Nominal Diameter.

The maximum normal torques are those when the valves are working at their best and driving conditions in a normal line. The normal torque necessary to operate a valve varies on the service conditions, as well as on the time in service and the frequency it is used.

4.3.1. GENERAL FACTORS AFFECTING THE TORQUE VALUE OF VALVES

- FREQUENCY OF OPERATIONS: The first operation of the valve after a long period of time in the closed position, requires an initial torque higher than the normal operation torque.

- LUBRICATING CHARACTERISTICS OF FLUID: One of the best lubricants for rubber-metal contact is water. To calculate the right torque, it is necessary to study the fluids to see if they are better or worse lubricants than water.

  Examples of lubricating media: WATER-LUBRICATING OILS-PROCESS WITH WATERY FLUIDS-BEVERAGE PLANTS, ETC.

  Examples of non-lubricating media: AIR-DRY GASES-DRY VOLUME SERVICE-SOLVENTS-DIESEL OIL-SOLID PARTICLES, ETC.

- SEDIMENTS ON DISC AND LINER: Discs made with ferritic based materials should not be used, as corrosion generates sediments making the torque value increase. The same thing happens with the liners when they are chemically attacked by the fluid.

- EXTREME TEMPERATURES: The torque experimental calculations are usually established at ambient temperature and standard absolute pressure (N.T.P= 20º C - 1,013 Bar). For constant operation temperatures close to the admissible limits for liners, there is a considerable torque increase owing to physical changes of the material as far as expansion, contraction and hardness. In these cases it is necessary to specially study the torque increase in each installation or process.

- LINER SWELLING: Some liners tend to swell when in contact with chemical substances and this makes the torque increase. This is why it is very important to select liner material correctly in order to resist the aggressive fluids to be worked with .

- FLUID VISCOSITY / PARTICLES IN SUSPENSION:: It is advisable to take these factors in mind as they significantly affect the torque calculation.

VAMEIN DE ESPAÑA, S.A.
Calle Temple, 1 - 28760 - Tres Cantos
Madrid (ESPAÑA)
Phone. (+34) 91 803 45 17 – Email: comercial@vamein.es

4.3.2. GUIDELINES TO SELECT A RIGHT TORQUE FACTOR.

To choose among different torque tables, experience shows that gearboxes cannot be classified according to the size of the valve and merely indicating whether the service will be dry or wet.

This is why studies and tests have been implemented permitting in most cases to assure that no oversized or undersized gearboxes, based on torque tables with four different service factors, have been selected. These service factors are indicated below in a summarized way:

- FACTOR FOR IDEAL SERVICE (I):

Values with this service factor should only be used under ideal working conditions and that the service required does not call for the responsibility to assure watertight closure.

Torque values under IDEAL SERVICE FACTOR are the result of short test periods with new valves and actuators; therefore no general safety factors, or those related to ageing or fatigue of materials, and hydraulic effects caused by the fluid, have been included.

Select only actuators with these torque values when watertightness requirements are not critical.

Furthermore, select always actuators with mechanical regulating switches permitting an accurate adjustment.

To use the values under this SERVICE FACTOR, the following requirements must be taken into consideration:

-The fluid composition does not affect the liner.
-Use with temperature range between 15 and 45º C
-The disc material must be resistant to the fluid.
-The fluid must be lubricant.
-Frequency of operations must be at least 1 time every 24 hours.

- NORMAL SERVICE FACTOR (N):

Values under this service can be considered as the most usual required ones in most of the butterfly valves. The selection of actuators with this SERVICE FACTOR give excellent application results, excepting under severe conditions.

To use the values under this SERVICE FACTOR it is necessary to bear in mind that the following requirements must be observed:

-Moderate chemical effects not affecting the liner material.
-Range of temperature within the liner limits.
-Disc material must be resistant to corrosion.
-The fluid must be lubricant, watery liquid.
-Frequency of operations must be at least 1 time every 30 days.
-Watertight closure must be guaranteed.

NOTE: Torque values for NORMAL SERVICE FACTOR have an increase of 50% on the torque values tested on testing bench and indicated in the IDEAL SERVICE FACTOR table.

VAMEIN DE ESPAÑA, S.A.
Calle Temple, 1 - 28760 - Tres Cantos
Madrid (ESPAÑA)
Phone. (+34) 91 803 45 17 – Email: comercial@vamein.es

- FACTOR FOR GENERAL FACTOR (G):

Values under this service factor can be used, where the experience showed that the values of the NORMAL SERVICE FACTOR have been higher than the real ones and, therefore they are high values, although the IDEAL SERVICE FACTOR criterion cannot be applied either, as all conditions are not met..

To use the values under this SERVICE FACTOR it is necessary to bear in mind that the following requirements must be observed:

-The fluid composition does not affect t liner.
-Use with temperature range between 15 and 65º C
-The disc material must be resistant to the fluid.
-The fluid must be lubricant, for example, drinking water, foodstuffs; liquids like beer, or clean oil like mineral oil, etc
-Frequency of operations must be at least 1 time every 7 days.
-Full watertightness is not essential or it is considered as relative.

NOTE: Torque values for GENERAL SERVICE FACTOR have an increase of 30% on the torque values tested on testing bench and indicated in the IDEAL SERVICE FACTOR table.

- FACTOR FOR SEVERE SERVICE (S):

Under severe service conditions or dry service, values under this service factor can be used.

To use the values under this SERVICE FACTOR it is necessary to bear in mind that the following factors are usually required :

-Severe chemical effects on the liner.
-Extreme temperature limits affecting the liner.
-Moderate or severe corrosion on disc by the fluid.
-Not lubricating fluid, for example, air, gas, etc. In general, dry volume services.
-Uncontrollable or unknown frequency of Operations.
-Guarantee of full and safe watertight closure, required by industrial and/or chemical process.

NOTE: Torque values for SEVERE SERVICE FACTOR have an increase of 100% on the torque values tested on testing bench and indicated in the IDEAL SERVICE FACTOR table

VAMEIN DE ESPAÑA, S.A.
Calle Temple, 1 - 28760 - Tres Cantos
Madrid (ESPAÑA)
Phone. (+34) 91 803 45 17 – Email: comercial@vamein.es

4.3.3. GENERAL NOTES TO BEAR IN MIND IN TORQUES

- MATERIAL SELECTION TABLES:

They have been made mainly taking our own experience and our customers' comments into account.

It is necessary to admit the wide range of factors and components of each fluid and installation for every specified field, as well as other factors to be considered, such as Temperatures-Concentration-Velocity-Pressure-Particles in suspension-Fluid conditions-Other hydraulic factors, etc.

Each of these factors can have a severe effect on the selected material, as there may also exist many variants among the different components, concentration, status and chemical composition of fluids.

Therefore, it is not possible to make out a table of materials containing all these undefined factors.

RECOMMENDATIONS:

The life of the materials will depend at least on the following parameters: environmental conditions, service conditions, type of fluid, hydraulic factors, number of operations, time in service or time installed, etc.
Therefore, it is advisable to check the efficiency of the valve periodically to verify if it complies with the service required.

- SPECIAL EXECUTION WITH UNDERCUT DISCS:

For operated valves where torque values lower than those indicated in the different tables are required, the use of undercut discs is recommended, bearing in mind that the maximum service pressure must not be higher than 6 bar.

- SERVICE AD LIMITS OF USE:

Put into practice what it is indicated in the EC Certificate of Conformity, bearing basically in mind the following comments:

-Temperature values are limited by the temperature values of the liners, and by the temperature values of the disc coating when applicable.
-Pressure values are limited, as far as watertightness is concerned, by the valve design itself. As standard, 16 bar up to DN-300 (12") AND 10 bar for DN-350 and above.

-The resistance of the materials, with regard to the fluids used, is limited by the specific characteristics of each material.

VAMEIN DE ESPAÑA, S.A.
Calle Temple, 1 - 28760 - Tres Cantos
Madrid (ESPAÑA)
Phone. (+34) 91 803 45 17 – Email: comercial@vamein.es

www.vamein.com

4.3.4. TORQUE TABLE FOR GENERAL SERVICE.

NOMINAL DIAMETER		WORK PRESSURE ⇨	10 bar	16 bar	150 p.s.i.	225 p.s.i.
mm	Inches	UNITS ⇨	N·m	N·m	Lbs x Inch.	Lbs x Inch.
50	2”		15	15	133	133
65	2 ½”		20	20	177	177
80	3”		25	25	221	221
100	4”		40	40	354	354
125	5”		50	50	443	443
150	6”		60	60	531	531
200	8”		160	160	1.416	1.416
250	10”		250	250	2.213	2.213
300	12”	⇨	300	300	2.655	2.655
350	14”		900	1.350	7.965	11.948
400	16”		1.200	1.800	10.620	15.930
450	18”		1.650	2.400	14.603	21.240
500	20”		2.300	3.500	20.355	30.975
600	24”	TORQUES	4.100	6.150	36.285	54.428
650	26”		4.800	7.200	42.480	63.720
700	28”		5.500	8.250	48.675	73.013
750	30”		6.500	9.500	57.525	84.075
800	32”		8.100	12.150	71.685	107.528
900	36”		10.000	15.000	88.500	132.750
1.000	40”		13.500	20.000	119.475	177.000
1.050	42”		14.200	21.300	188.505	125.670
1.100	44”		15.000	22.000	132.750	194.700
1.200	48”		16.500	24.500	146.025	216.825
1300	52”		18.000		159.300	
1400	56”		19.500		172.575	
1500	60”		21.000		185.850	
1600	64”	⇨	23.000		203.550	
1800	72”		27.000		238.950	
2000	80”		30.000		265.500	

N.B: Torques listed in the above table are for guidance only and have been calculated for a constant working pressure and conditions. Torques valid for "VAMEIN" butterfly valves with synthetic EPDM or NITRILE rubber seats and water at ambient temperature (20º C approx.). As torques shown in this table were obtained on static testing bench it is necessary to take into account the dynamic conditions of the fluid for every specific line (velocity, flow, cavitations, hydraulic factors, etc) for the hydrodynamic stress created by the flow on the valve disc. The **VAMEIN** butterfly valve is designed to work with fluids, which act like lubricants. For air or gas service, torques are considerably higher, at least 35 %. In this case, please contact our Technical Department to analyze the situation. For Nominal Diameters bigger than those specified in the table, contact our Technical Department.
Safety factor included in these torque figures

.

VAMEIN DE ESPAÑA, S.A.
Calle Temple, 1 - 28760 - Tres Cantos
Madrid (ESPAÑA)
Phone. (+34) 91 803 45 17 – Email: comercial@vamein.es

www.vamein.com

5. DATA FOR PURCHASE ORDER.

It is advisable to supply the following information based on standard EN-593.

DATA FOR THE PURCHASE ORDER								
NOMINAL DIAMETER OF THE VALVE	mm			Inches				
FLANGE STANDARD	DIN PN	ASME- Lbs		B.S- TABLE-		OTHERS		
BODY TYPE	WAFER							
	WAFER LIGHT							
	FLANGED							
	LUG							
MATERIALS	BODY							
	DISC							
	LINER							
	SHAFT							
WORKING CONDITIONS	MAXIMUM WORKING PRESSURE						bar	
	MAXIMUM WORKING TEMPERATURE						º C	
	VELOCITY OF FLUID						M/Sec.	
	CORROSIVE AMBIENT	YES		NO				
	OPERATIONS PER DAY / YEAR	/						
ACTUATOR	LEVER							
	GEARBOX							
	TEE SQUARE							
	DOUBLE ACTING PNEUMATIC							
	SPRING RETURN PNEUMATIC							
	DOUBLE ACTING HYDRAULIC							
	SPRING RETURN HYRDAULIC							
	ELECTRIC							
REQUIRED DOCUMENTATION	MATERIAL QUALITY CERTIFICATES	YES		NO				
	TEST CERTIFICATES	YES		NO				
	TESTING PROTOCOL	YES		NO				
	DRAWINGS	YES		NO				
	QUALITY ASSURANCE HANDBOOK	YES		NO				
	CERTIFICATION CHECKED BY CERTIFYING OR APPROVAL COMPANIES.	YES		NO				
ADDITIONAL INFORMATION FOR ACTUATORS AND ACCESSORIES								
FLUID PARTICULAR CONDITIONS								
OTHER INTERESTING DATA								

VAMEIN DE ESPAÑA, S.A.
Calle Temple, 1 - 28760 - Tres Cantos
Madrid (ESPAÑA)
Phone. (+34) 91 803 45 17 – Email: comercial@vamein.es

6. QUALITY ASSURANCE.

6.1. SIGNIFICANT CERTIFICATES. ..... 2 to 7
6.2. MATERIAL QUALITY CONTROL. 8
6.3. VISUAL AND DIMENSIONAL CONTROL. 8
6.4. EXTERNAL QUALITY VISUAL INSPECTION. 8
6.5. TEST PROCEDURES. 9
6.6. TEST CONTROLS CARRIED OUT BY INSPECTION COMPANIES. 10
6.7. ISSUE OF QUALITY AND TEST CERTIFICATES. ..... 10 to 16

It is **VAMEIN DE ESPAÑA, S.A.** policy to make the products meet the quality required by customers as well as the requirements called for by standards, specifications and/or applicable codes as far as security, reliability and quality are concerned.

Finally, **VAMEIN DE ESPAÑA, S.A.** has established a quality system, approved to the quality systems standard UNE-EN-ISO 9001. It has also been evaluated and meets the requirements of Annex III, Module H of the Pressure Equipment Directive 2014/68/EU of the European Economic Community, as well as the Directive concerning equipment and protective systems intended for use in potentially explosive atmospheres ATEX 2014/34/EU of the European Economic Community.

ISO 9001 Certificate of Approval, EU Certificate of Conformity PED 2014/68/EU, EU Technical File Receipt certificate ATEX 2014/34/EU, and DVGW certificate for drinking water, are attached below.

At the same time, **VAMEIN DE ESPAÑA, S.A.** have other approvals and homologations available for specific applications required by customers.

As soon as an order is passed on to manufacturing, there is a rigorous quality control on all the elements that will take place during the manufacturing of the **VAMEIN** butterfly valve, and the valve will not be considered as acceptable till all the above is met.

The materials chosen for the **VAMEIN** butterfly valve will be suitable for the working pressures and conditions required and they have been designed with a high safety factor.

The processes we undertake to make sure of the quality of our end product, can be grouped into six headings which are developed later on within this chapter:

- MATERIAL QUALITY CONTROL
- VISUAL AND DIMENSIONAL CONTROL
- EXTERNAL QUALITY VISUAL INSPECTION
- TEST PROCEDURES
- TEST CONTROLS CARRIED OUT BY INSPECTION COMPANIES
- ISSUE OF QUALITY AND TEST CERTIFICATES

VAMEIN DE ESPAÑA, S.A.
Calle Temple, 1 - 28760 - Tres Cantos
Madrid (ESPAÑA)
Phone. (+34) 91 803 45 17 – Email: comercial@vamein.es

6.1. SIGNIFICANT CERTIFICATES.

- ISO 9001. CERTIFICATE OF APPROVAL No. SGI 2202017
- EU CERTIFICATE OF CONFORMITY PED 2014/68/EU No. 0038/PED/MAD/0116
- EU TECHNICAL FILE RECEIPT CERTIFICATE 2014/34/EU No. 0038 / ATEX / BBO08090725/1.
- DVGW CERTIFICATE FOR DRINKING WATER No. DW-6201CO0311

VAMEIN DE ESPAÑA, S.A.
Calle Temple, 1 - 28760 - Tres Cantos
Madrid (ESPAÑA)
Phone. (+34) 91 803 45 17 – Email: comercial@vamein.es

Lloyd's Register LRQA

CERTIFICATE OF APPROVAL

This is to certify that the Quality Management System of:

VAMEIN DE ESPAÑA, S.A.
C/ Temple nº 1, Polígono Industrial Tres Cantos
28760 Tres Cantos, Madrid
Spain

has been approved by Lloyd's Register Quality Assurance
to the following Quality Management System Standards:

ISO 9001:2015

The Quality Management System is applicable to:

Design and manufacture of wafer, flanged and lug type butterfly valves for nominal diameters from DN 50 to DN 1200 (DN 2" to DN-48") for PN10, PN16 and class 150.

Approval
Certificate No: SGI 2202107

Original Approval: 17 May 2002
Current Certificate: 02 July 2018
Certificate Expiry: 01 July 2021

Issued by: LRQA España, S.L.U.
For and on behalf of: Lloyd's Register Quality Assurance Limited

UKAS QUALITY MANAGEMENT 001

C/ Princesa, 29 – 1º - 28008 Madrid, España
Por y en nombre de 1 Trinity Park, Bickenhill Lane, Birmingham B37 7ES, United Kingdom
Esta aprobación es realizada en acuerdo con los procedimientos de evaluación y certificación de LRQA y monitoreada por LRQA.
El uso de la Marca de Acreditación UKAS indica Acreditación con respecto a aquellas actividades cubiertas por el Certificado de Acreditación 001.
Matrix Revision 14

Lloyd's Register Group Limited, its affiliates and subsidiaries, including Lloyd's Register Quality Assurance Limited (LRQA), and their respective officers, employees or agents are, individually and collectively, referred to in this clause as 'Lloyd's Register'. Lloyd's Register assumes no responsibility and shall not be liable to any person for any loss, damage or expense caused by reliance on the information or advice in this document or howsoever provided, unless that person has signed a contract with the relevant Lloyd's Register entity for the provision of this information or advice and in that case any responsibility or liability is exclusively on the terms and conditions set out in that contract.

VAMEIN DE ESPAÑA, S.A.
Calle Temple, 1 - 28760 - Tres Cantos
Madrid (ESPAÑA)
Phone. (+34) 91 803 45 17 – Email: comercial@vamein.es
www.vamein.com

Lloyd's Register

EU CERTIFICATE OF CONFORMITY

In accordance with the requirements of the Pressure Equipment Directive 2014/68/EU and the Pressure Equipment (Safety) Regulations 2016, UK Statutory Instrument 2016 No. 1105

This is to certify that the Quality Management System of:

Vamein de España, S.A.
C/Temple nº 1
28760 – Tres Cantos- Madrid
Spain

has been assessed against the requirements of Annex III, Module H of the Pressure Equipment Directive 2014/68/EU, and Schedule 4, Module H of the Pressure Equipment (Safety) Regulations 1999 and conforms to the requirements for the products shown below:

Design and manufacture of butterfly valves

(see Schedule attached)

Approval is subject to the continued maintenance of the quality system in accordance with the requirements of the above Directive and Regulations for the products listed on the attached schedule.

Authorisation is hereby given to use the LRV Notified Body Identification Number in accordance with the requirements of the specified Directive and Regulations in relation to the products as identified above.

Certificate No:	0038/PED/MAD/0116
Original Approval:	30 May 2002
Current Certificate:	30 May 2017
Certificate Expiry:	29 May 2020
LRV Notified Body Number 0038	

Lloyd's Register Verification Limited
Teresa Souto
30/05/2017
Madrid

Lloyd's Register

Teresa Souto on behalf of Lloyd's Register Verification

Lloyd's Register Verification Limited (Reg. no. 4929226) is a limited company registered in England and Wales. Registered office: 71 Fenchurch Street, London, EC3M 4BS, UK. A subsidiary of Lloyd's Register Group Limited.

Lloyd's Register Group Limited, its affiliates and subsidiaries and their respective officers, employees or agents are, individually and collectively, referred to in this clause as the 'Lloyd's Register'. Lloyd's Register assumes no responsibility and shall not be liable to any person for any loss, damage or expense caused by reliance on the information or advice in this document or howsoever provided, unless that person has signed a contract with the relevant Lloyd's Register entity for the provision of this information or advice and in that case any responsibility or liability is exclusively on the terms and conditions set out in that contract.

LRV/ECD/PED/H/December_2016/Rev.4

VAMEIN DE ESPAÑA, S.A.
Calle Temple, 1 - 28760 - Tres Cantos
Madrid (ESPAÑA)
Phone. (+34) 91 803 45 17 – Email: comercial@vamein.es

Lloyd's Register

EU CERTIFICATE OF CONFORMITY
CERTIFICATE 0038/PED/MAD/0116 SCHEDULE

In accordance with the requirements of the Pressure Equipment Directive 2014/68/EU and the Pressure Equipment (Safety) Regulations 2016, UK Statutory Instrument 2016 No. 1105

Vamein de España, S.A.
C/Temple nº 1
28760 – Tres Cantos- Madrid
Spain

Product(s)

Butterfly valves type WAFER

Nominal diameters from DN50 to DN1200
Nominal pressures PN10, PN16 and Class 150.
Materials: Nodular cast, carbon steel, stainless steel and bronze

Butterfly valves type FLANGES

Nominal diameters from DN100 to DN1200
Nominal pressures PN10, PN16 and Class 150.
Materials: Nodular cast, carbon steel, stainless steel and bronze

Butterfly valves type LUG

Nominal diameters from DN50 to DN600
Nominal pressures PN10, PN16 and Class 150.
Materials: Nodular cast, carbon steel, stainless steel and bronze

Schedule Issue: 02

Date of Schedule Issue: 30 May 2017

LRV Notified Body Number 0038

Lloyd's Register Verification Limited
Teresa Souto
30/05/2017
Madrid

Teresa Souto on behalf of Lloyd's Register Verification

Page 1 of 1

Lloyd's Register Verification Limited (Reg. no. 4929226) is a limited company registered in England and Wales. Registered office: 71 Fenchurch Street, London, EC3M 4BS, UK. A subsidiary of Lloyd's Register Group Limited.

LRV/ECD/PED/H/December_2016/Rev.4

VAMEIN DE ESPAÑA, S.A.
Calle Temple, 1 - 28760 - Tres Cantos
Madrid (ESPAÑA)
Phone. (+34) 91 803 45 17 – Email: comercial@vamein.es

www.vamein.com

EU TECHNICAL FILE RECEIPT

This is to certify that Lloyd's Register Verification, a Notified Body under the terms of the 'Equipment and Protective Systems Intended for use in Potentially Explosive Atmospheres Directive', 2014/34/EU, has, in conformity with the requirements of the Conformity Assessment Procedure as described within Article 13 item 1b (ii) of the Directive, received for retention a Technical File as detailed below;

This receipt is issued to:

APPLICANT: **VAMEIN DE ESPAÑA, S.A.**
C/ Temple, 1
(28760) Tres Cantos (Madrid)

TECHNICAL FILE DESCRIPTION:

Wafer, flanged and lug type butterfly valves for nominal diameters from DN50 to DN1200 (2" to 48") and PN10 to PN16

TECHNICAL FILE REFERENCE: ET_2014_34_UE_EDICION_00_VAMEIN de fecha 03.06.2019

The file will be stored for an initial period of ten years from date of receipt. The applicant will be contacted after ten years and the file will be either returned or destroyed, or a new retention agreement established, as applicable.

This receipt must be produced by the manufacturer to reclaim the stored technical file.

Storage No:	0038/ATEX/BBO08090725/1
Date of Receipt:	24 June 2009
Date of current:	24 June 2019
Last date of retention:	23 June 2029

LRV Notified Body Number 0038

Lloyd's Register Verification Limited
Madrid

Teresa Souto on behalf of Lloyd's Register Verification Ltd.

Lloyd's Register Verification Limited (Reg. no. 4929226) is a limited company registered in England and Wales. Registered office: 71 Fenchurch Street, London, EC3M 4BS, UK. A subsidiary of Lloyd's Register Group Limited.

Lloyd's Register Group Limited, its affiliates and subsidiaries and their respective officers, employees or agents are, individually and collectively, referred to in this clause as the 'Lloyd's Register'. Lloyd's Register assumes no responsibility and shall not be liable to any person for any loss, damage or expense caused by reliance on the information or advice in this document or howsoever provided, unless that person has signed a contract with the relevant Lloyd's Register entity for the provision of this information or advice and in that case any responsibility or liability is exclusively on the terms and conditions set out in that contract.

IM503-04-xxxx Appendix 1

VAMEIN DE ESPAÑA, S.A.
Calle Temple, 1 - 28760 - Tres Cantos
Madrid (ESPAÑA)
Phone. (+34) 91 803 45 17 – Email: comercial@vamein.es

DVGW CERT

DVGW CERT

DVGW-Baumusterprüfzertifikat

DVGW type examination certificate

DW-6201CO0311
Registriernummer
registration number

Anwendungsbereich ***field of application***	Produkte der Wasserversorgung *products of water supply*
Zertifikatinhaber ***owner of certificate***	VAMEIN DE ESPANA, S.A. Calle Temple, 1, E-28760 Tres Cantos-Madrid
Vertreiber ***distributor***	VAMEIN DE ESPANA, S.A. Calle Temple, 1, E-28760 Tres Cantos-Madrid
Produktart ***product category***	Armaturen für die Wasserversorgung: Absperrklappe (6201)
Produktbezeichnung ***product description***	Absperrklappe für die Wasserversorgung
Modell ***model***	VAMEIN Series 100, 500
Prüfberichte ***test reports***	Kontrollprüfung Labor: A0 001/17 vom 24.07.2017 (TZW) Baumusterprüfung: AO 023/12 vom 14.10.2013 (TZW) KTW-Prüfung: KA 0179/17 vom 27.07.2017 (TZW) Mikrobiologische Prüfung: MO 182/17 vom 12.01.2018 (TZW) KTW-Prüfung: KA 0096/13 vom 27.06.2017 (TZW)
Prüfgrundlagen ***test basis***	DVGW W 363-(P) (01.06.2010) DIN EN 1074-1 (01.07.2000) DIN EN 1074-2 (01.07.2004) UBA BESCH-LL (30.11.2010) UBA ELASTOM (16.03.2016) DVGW W 270 (01.11.2007)
Ablaufdatum / AZ ***date of expiry / file no.***	21.10.2023 / 18-0551-WNV

15.10.2018 Fk A-1/2
Datum, Bearbeiter, Blatt, Leiter der Zertifizierungsstelle
date, issued by, sheet, head of certification body

DVGW CERT GmbH ist von der DAkkS nach DIN EN ISO/IEC 17065:2013 akkreditierte Stelle für die Zertifizierung von Produkten der Energie- und Wasserversorgung.

DVGW CERT GmbH is an accredited body by DAkkS according to DIN EN ISO/IEC 17065:2013 for certification of products for energy and water supply industry.

DAkkS
Deutsche Akkreditierungsstelle
D-ZE-16028-01-05

DVGW CERT GmbH
Zertifizierungsstelle
Josef-Wirmer-Str. 1-3
53123 Bonn
Tel. +49 228 91 88 - 888
Fax +49 228 91 88 - 993
www.dvgw-cert.com
info@dvgw-cert.com

6.2. MATERIAL QUALITY CONTROL.

As a usual procedure, **VAMEIN DE ESPAÑA, S.A.** call for material certificate to EN 10204 3.1 for every component of the butterfly valves form all suppliers, and in the event of automatic actuators an operation certificate is also called for.

VAMEIN DE ESPAÑA, S.A. guarantee the trazability of bodies, discs and liners of the butterfly valves by means of the quality certificates from the suppliers, as all these parts are marked with the relevant heat or batch numbers.

The quality certificates received from our suppliers at least show the following data:

- HEAT NUMBER AND MANUFACTURE DATE.
- REQUIRED QUALITY.
- QUANTITY AND EXACT DESIGNATION OF PARTS.
- CHEMICAL COMPOSITION.
- TENSILE STRENGTH.
- YIELD STRENGTH.
- ELONGATION.
- HARDNESS.

6.3. VISUAL AND DIMENSIONAL CONTROL.

One of the special features about the **VAMEIN** butterfly valve is the interchangeability of parts and actuators between valves with the same nominal diameter.

For this to be possible it is necessary to carry out constant dimensional controls during the whole manufacturing process, from the machining both in the machine itself in each operation and by the Quality Department. Once the machining and assembly process has been finished, the following checking is made:

- FACE TO FACE DIMENSION.
- NUMBER OF HOLES.
- HOLE DIAMETER.
- BOLT CIRCLE DIAMETER.
- CHORD LENGTH CENTRES.
- THREAD CONTROL. ("LUG" AND "FLANGE" TYPE VALVES).
- OPERATION CONTROL

6.4. EXTERNAL QUALITY VISUAL INSPECTION.

- SEAT QUALITY.
- QUALITY OF THE EDGE OF THE DISC IN CONTACT WITH THE SEAT.
- CLEAR HEAT NUMBERS.
- QUALITY OF COATING OR PAINT

VAMEIN DE ESPAÑA, S.A.
Calle Temple, 1 - 28760 - Tres Cantos
Madrid (ESPAÑA)
Phone. (+34) 91 803 45 17 – Email: comercial@vamein.es

6.5. TEST PROCEDURES.

The VAMEIN butterfly valves are put under the resistance and watertightness tests mentioned in sections 6.4.1 and 6.4.2 of this chapter, prior to being supplied. These tests are carried out on compatible benches by using suitable scale calibrated manometers according to the applicable procedures meeting the ISO 5208-93 Standard.
These tests can be carried out in accordance with the requirements of other applicable standards on customer´s request.

6.5.1. RESISTANCE TEST.

The valve, with the disc in the partially open position, is put under a minimum test pressure of 1,5 times the maximum working pressure, or nominal pressure. This is a hydrostatic test with water at ambient temperature in which leaks through the body and shaft seals or structural damages or permanent deformations of any valve components are not permitted.

This test is carried out for a minimum of fifteen (15) seconds on DN-50 (2”) valves, sixty (60) seconds for valves from DN-65 (2,5”) up to DN-200 (8”) and one hundred and eighty (180) seconds for DN-250 (10”) valves and above.

6.5.2. WATERTIGHTNESS TEST.

The valve, with the disc in the closed position, is put under a minimum test pressure of 1,1 times the maximum working pressure, or nominal pressure. This is a hydrostatic test with water at ambient temperature in which leaks outside through the body, disc or any type of seals, and structural damages of any valve components are not permitted.

This test is carried out for a minimum of fifteen (15) seconds for valves from DN-50 (2”) up to DN-200 (8”), thirty (30) seconds for valves from DN-250 (10”) up to DN-450 (18”) and sixty (60) seconds for DN-500 (20”) valves and above.

N.B: Whenever the order calls for tests with air or gas, the test pressure up to DN-250 (10”) will be at 6±1 bars. For bigger sizes, please consult with our technical department.

6.5.3. ACTUATOR TEST.

With the actuator fitted on the valve, it is operated three times from the fully open position to the fully closed position, in order to verify its operation and check the valve/ actuator unit.

6.5.4. LABELLING AND PACKING CONTROL.

Once all controls described above have been carried out, the adhesive label showing the product code, manufacture number, working conditions and materials of the different components, as well as country of origin, is placed on every valve. Afterwards, the product is packed into high resistance individual plastic bags (only up to DN-300 – 12”) with the label on it. This guarantees the product to be undamaged both in transport and storage until it is finally placed in the line.

VAMEIN DE ESPAÑA, S.A.
Calle Temple, 1 - 28760 - Tres Cantos
Madrid (ESPAÑA)
Phone. (+34) 91 803 45 17 – Email: comercial@vamein.es
www.vamein.com

6.6. TEST CONTROLS CARRIED OUT BY INSPECTION COMPANIES.

On request, and always on customer's charge, all testings described above can be carried out at our facilities in the presence of the Inspection and Control Companies to corroborate their veracity. Some of these Companies are indicated bellow as a reference:

- ATISAE.
- BUREAU VERITAS.
- DET NORSKE VERITAS.
- DISEPROSA.
- EURO CONSULT.
- EURO CONTROL.
- FOSTER WHEELER.
- GERMANICH LLOYD'S.
- LLOYD'S REGISTER OF SHIPPING.
- GOVERNMENTAL.
- SGS CONTROL.
- TECNOS.
- GOST R.
- ETC.

6.7. ISSUE OF QUALITY AND TEST CERTIFICATES.

6.7.1. STANDARD CERTIFICATES ISSUED BY QUALITY DEPARTMENT OF VAMEIN DE ESPAÑA, S.A.

Only when placing an order you may ask for certificates to be issued by our QUALITY DEPARTMENT (Q.D.) with the composition and mechanical features of the product in accordance with the EN 10204 2.2. Standard. Test certificates will be issued after the tests have been done according to the ISO-5208 Standard, and the certificates issued according to the EN 10204 3.1. Standard.

6.7.2. QUALITY AND TEST CERTIFICATES SIGNED BY INSPECTION COMPANIES OR OFFICIAL BODIES.

Only when placing an order the certificates with the materials of the product, issued by our Quality Department, may be requested which will then be contrasted and approved by Inspection Companies. The pressure and working tests will be done in presence of an Inspector, authorized by the Customer, who will approve the certificate issued by our Q.D.

6.7.3. ISSUE OF SPECIAL CERTIFICATES AND ADDITIONAL DOCUMENTS.

In addition to the certifications shown in 6.6.1 and 6.6.2, **VAMEIN DE ESPAÑA, S.A.** is in a position to accept any tests, inspections or certifications, before the order is placed such as: N.D.T., X-RAYS, Penetrant Fluids, Ultrasound, Specimen breaking, Hardness control, Chemical Tests, Thickness Control, dimensional controls, Manufacturing Planning, IPP, etc.

VAMEIN DE ESPAÑA, S.A.
Calle Temple, 1 - 28760 - Tres Cantos
Madrid (ESPAÑA)
Phone. (+34) 91 803 45 17 – Email: comercial@vamein.es

6.7.4. VAMEIN DE ESPAÑA, S.A. STANDARD QUALITY DOCUMENTS.

The following quality and manufacturing documents are included in our organization:

- TEST INSPECTION CERTIFICATE AS PER EN 10204 3.1.
- MATERIAL QUALITY CERTIFICATE AS PER EN 10204 2.2.
- INSPECTION PROGRAMME POINT (IPP).
- DECLARATION OF CONFORMITY TO PRESSURE EQUIPMENT DIRECTIVE PED 2014/68/EU.
- DECLARATION OF CONFORMITY TO THE EUROPEAN DIRECTIVE ATEX 2014/34/EU ON PROTECTION SYSTEMS AND EQUIPMENTS TO USE IN EXPLOSIVE ATMOSPHERE.

VAMEIN DE ESPAÑA, S.A.
Calle Temple, 1 - 28760 - Tres Cantos
Madrid (ESPAÑA)
Phone. (+34) 91 803 45 17 – Email: comercial@vamein.es

Vamein de España, S.A. C/ Temple Nº 1. Tres Cantos. MADRID 28760. Telf. 91 803 45 17 / Fax. 91 803 57 69	**CERTIFICADO DE INSPECCIÓN DE PRUEBAS SEGÚN** ***TESTS INSPECTION CERTIFICATE AS PER*** **EN 10 204 3.1**	N° / *No.:* Página / *Page:* Fecha / *Date:*

REFERENCIAS / *REFERENCES*

Cliente / *Customer* :	Pedido Nº / *Order No.*:
N/ Ref. / *Our Ref.* :	Albarán Nº / *Delivery note No.*:

VÁLVULAS PROBADAS / *TESTED VALVES*

Posición *Item*	Cantidad *Quantity*	D.N. mm	D.N. *Inches*	Código válvula *Valve code*	Presión nominal *Nominal pressure*	Norma de bridas *Flange standard*

PRUEBAS HIDROSTÁTICAS / *HYDROSTATIC TESTS*

Tipo de fluido / *Fuid type :*

Procedimiento aplicable / *Applicable procedure :*

DESCRIPCIÓN DE LA PRUEBA *TEST DESCRIPTIÓN*	PRESIÓN DE PRUEBA *TEST PRESSURE*	TIEMPO DE PRUEBA *TEST TIME PERIOD*	RESULTADO *RESULT*
Prueba de resistencia del cuerpo *Body resistance test*			
Prueba de estanqueidad al cierre *Closed valve watertightness test*			

PRUEBA DE FUNCIONAMIENTO / *OPERATION TEST*

Procedimiento aplicable *Applicable Procedure*	Número de maniobras *N. of operations*	Tipo de operación *Way of gearing*	Resultado *Result*

OBSERVACIONES / *REMARKS*

Vamein de España, S.A. certifica que las válvulas anteriormente descritas, cumplen con los requisitos del pedido. *Vamein de España, S.A. certify that the above mentioned valves meet the requirements of the order.*	Resp. Dpto. Calidad / *Quality Dept. Manager*

VAMEIN DE ESPAÑA, S.A.
Calle Temple, 1 - 28760 - Tres Cantos
Madrid (ESPAÑA)
Phone. (+34) 91 803 45 17 – Email: comercial@vamein.es

Vamein de España, S.A. C/ Temple Nº 1. Tres Cantos. MADRID 28760. Telf. 91 803 45 17 / Fax. 91 803 57 69	**CERTIFICADO DE CALIDAD DE MATERIALES** ***MATERIAL QUALITY CERTIFICATE***	Nº / *No.*: Página / *Page*: Fecha / *Date*:

REFERENCIAS / *REFERENCES*

Cliente / *Customer* :	Pedido Nº / *Order No.*:
N/ Ref. / *Our Ref.* :	Albarán Nº / *Delivery note No.*:

MATERIAL SUMINISTRADO / *MATERIAL SUPPLIED*

Válvulas mariposa / *Butterfly valves* :

ESPECIFICACIÓN DE MATERIALES / *MATERIAL ESPECIFICATION*

Cuerpo / *Body* :	Nº de Colada / *Heat* :	
Disco / *Disc* :	Nº de Colada / *Heat* :	
Asiento / *Seat* :		
Eje / *Shaft* :		
Casquillo / *Bushing* :		

PROPIEDADES MECÁNICAS / *MECHANICAL FEATURES*

Propiedades / *Features*	Unidades *Units*	Cuerpo *Body*	Disco *Disc*	Asiento *Seat*	Eje *Shaft*	Casquillo *Bushing*
Carga de rotura / *Tensile strenght*	N/mm^2					
Límite elástico / *Yield strenght*	N/mm^2					
Alargamiento / *Elongation*	%					
Reducción de área / *Area reduction*	%					
Resiliencia / *Energy value*	J					
Dureza Brinell / *Brinell hardness*	HB					

COMPOSICIÓN QUÍMICA / *CHEMICAL COMPOSITION*

Elemento *Element*	Cuerpo *Body*	Disco *Disc*	Asiento *Seat*	Eje *Shaft*	Casquillo *Bushing*
C					
Mn					
Si					
P					
S					
Cr					
Ni					
Mo					
Cu					
Sn					
Fe					
Al					
Mg					
Zn					
Sb					
Pb					
Grafito / *Graphite*					

OBSERVACIONES / *REMARKS*

Vamein de España, S.A. certifica que los materiales que ampara este documento, cumplen con lo requerido en cada una de las normas y/o especificaciones que se describen, según manifiestan los fabricantes de los mismos en sus certificados de calidad. *Vamein de España, S.A. certify that the materials shown in this document comply whith all standards and/or specifications described above, as per the quality certificates issued by the manufacturers.*	Resp. Dpto. Calidad / *Quality Dept. Manager*

VAMEIN DE ESPAÑA, S.A.
Calle Temple, 1 - 28760 - Tres Cantos
Madrid (ESPAÑA)
Phone. (+34) 91 803 45 17 – Email: comercial@vamein.es

Vamein de España, S.A. C/ Temple Nº 1. Tres Cantos. MADRID 28760. Telf. 91 803 45 17 / Fax. 91 803 57 69	**PROGRAMA DE PUNTOS DE INSPECCIÓN (PPI)**	No.:	Rev:
		Página:	1 of 1
		Fecha:	

REFERENCIAS

CLiente:	N / Ref.:	**Keys**: H = Punto de espera N = Punto de aviso W = Punto de presencia R = Revisión
Pedido No.:	Producto:	
Proyecto:		

PUNTOS DE INSPECCIÓN

Operaciones de inspección		Procedimiento / Norma de prueba	Inspeccionado por		
Nº	Descripción		VAMEIN	CLIENTE	CLIENTE FINAL
1.0	**Recepción de materiales**	-Orden de compra interna. -Instrucción de inspección aplicable. -Planos aplicables. -Norma del material aplicable. -EN 10 204 3.1.	H R		
1.1	Inspección dimensional				
1.2	Inspección visual				
1.3	Revisión de certificados de materiales				
2.0	**Pruebas hidrostáticas**	-ISO 5208. -INS.DAC100.01. -EN 10 204 3.1.	H		
2.1	Resistencia del cuerpo				
	Presión de prueba: 1,5 x presión nominal				
	Fluido de la prueba: Agua				
	Temperatura: Ambiente				
2.2	Estanqueidad del asiento				
	Presión de prueba: 1,1 x presión nominal				
	Fluido de la prueba: Agua				
	Temperatura: Ambiente				
3.0	**Prueba de funcionamiento**	-INS.DAC100.01. -EN 10 204 3.1.	H		
3.1	Funcionamiento				
4.0	**Inspección de pintura**	-Procedimiento aplicable.	H		
4.1	Inspección visual de las superficies pintadas				
4.2	Comprobación del espesor de pintura				
5.0	**Comprobación del montaje**	-Plano aplicable.	H		
5.1	Inspección dimensional				
6.0	**Inspección Final**	-EN 19. -Marcado CE. -Lista de marcado aplicable. -PPI aplicable	H R		
6.1	Comprobación del marcado y etiquetado				
6.2	Documentación-Revisión dossier de calidad				
6.3.	Autorización de envío				

REMARKS

Preparado por:	Revisado por:	Aprobado cliente:

VAMEIN DE ESPAÑA, S.A.
Calle Temple, 1 - 28760 - Tres Cantos
Madrid (ESPAÑA)
Phone. (+34) 91 803 45 17 – Email: comercial@vamein.es

VAMEIN DE SPAIN, S.A. C/ Temple Nº 1. 28760 – TRES CANTOS MADRID - SPAIN Telf. 91 803 45 17 / Fax. 91 803 57 69	**EU DECLARATION OF CONFORMITY TO PRESSURE EQUIPMENT DIRECTIVE 2014/68/UE**	Number: Page: 1 / 1 Date:

EQUIPMENT DESCRIPTION

ITEM	QUAN.	DESCRIPTION	WORKING PRESSURE (bar)	MATERIALS	SERVICE AND LIMITS OF USE	STANDARDS AND/OR DESIGN CODE
				See ANNEX A revision 09 dated 14.03.18 table 1	See ANNEX A revision 09 dated 14.03.18 tables 2, 3 and 4	See ANNEX A revision 09 dated 14.03.18 table 5

PROCEDURE FOR THE COMPLIANCE EVALUATION

Module H.

EQUIPMENT IDENTIFICATION

Serial No.

FLUID TYPES TO USE

All fluids.

REFERENCES TO OTHER APPLIED COMMUNITY DIRECTIVES

Not applicable.

NOTIFIED BODY

LLOYD´S REGISTER VERIFICATION LIMITED No 0038
71 Fenchurch Street
LONDON EC3M 4BS - UK

EC CERTIFICATE OF CONFORMITY

CERTIFICATE No. 0038/PED/MAD/0116

The General Manager, on behalf of VAMEIN DE ESPAÑA, S.A:.

CERTIFIES:

The above described equipments have been designed, made, examined and tested in compliance with the requirements of the Pressure Equipment Directive 2014/68/UE as per the indicated evaluation module.

That this declaration of conformity is issued under the exclusive responsibility of the manufacturer.

And for the record, this DECLARATION OF CONFORMITY is issued in Tres Cantos on the mentioned date.

VALENTÍN ALMODÓVAR GARCÍA
General Manager

VAMEIN DE ESPAÑA, S.A.
Calle Temple, 1 - 28760 - Tres Cantos
Madrid (ESPAÑA)
Phone. (+34) 91 803 45 17 – Email: comercial@vamein.es

VAMEIN DE SPAIN, S.A. C/ Temple Nº 1. 28760 – TRES CANTOS MADRID - SPAIN Telf. 91 803 45 17 / Fax. 91 803 57 69	EU DECLARATION OF CONFORMITY TO DIRECTIVE 2014/34/EU ON PROTECTION SYSTEMS AND EQUIPMENTS TO USE IN POTENCIALLY EXPLOSIVE ATMOSPHERES	Number: Page: 1/1 Date:

EQUIPMENT DESCRIPTION

POS.	QUAN.	CODE	WORKING PRESSURE (bar)	MATERIALS	SERVICE AND LIMITS OF USE	STANDARDS AND/OR DESIGN CODE
				See ANNEX A revision 00 dated 03.06.19 table 1	See ANNEX A revision 00 dated 03.06.19 tables 2, 3 and 4	See ANNEX A revision 00 dated 03.06.19 table 5

HARMONIZED STANDARDS

EN 13463-1:2011 EN 1127-1:2012

EQUIPMENT IDENTIFICATION

Serial No.

FLUID TYPES TO USE

All fluids.

REFERENCES TO OTHER APPLIED COMMUNITY DIRECTIVES

2014/68/EU

NOTIFIED BODY

LLOYD´S REGISTER VERIFICATION LIMITED No 0038
71 Fenchurch Street
LONDON EC3M 4BS - UK

EC CERTIFICATE - TECHNICAL FILE RECEIPT

0038/ATEX/BBO08090725/1

The General Manager, on behalf of VAMEIN DE ESPAÑA, S.A:

S T A T E S :

That the e above described equipment/s is/are in accordance with the requirements of the 2014/34/EU Directive.

That the Notified Body LLOYD'S REGISTER VERIFICATION No. 0038, according to the requirements of the Conformity Assessment Procedure, shown in article 13, item 1b (ii) of the Directive, keeps one copy of the Technical Dossier ATEX Rev. 00 dated 03.06.2019 of the equipment classified as Group II Category 2GD.

And for the record, this DECLARATION OF CONFORMITY is issued in Tres Cantos on the above mentioned date.

VALENTÍN ALMODÓVAR GARCÍA
General Manager

VAMEIN DE ESPAÑA, S.A.
Calle Temple, 1 - 28760 - Tres Cantos
Madrid (ESPAÑA)
Phone. (+34) 91 803 45 17 – Email: comercial@vamein.es

7. HYDRAULIC FEATURES OF THE VAMEIN BUTTERFLY VALVES

7.1. PRESSURE DROP. ..... 1 to 2
7.2. Kv VALUE CHART (m^3/hour). 3
7.3. PRESSURE DROP TABLE. 4
7.4. CORRESPONDENCE CHART OF UNITS OF MEASUREMENT ..... 5 to 8

7.1. PRESSURE DROP.

Butterfly valve size / Drop pressure calculation.

As a rule, the same nominal diameter is used both for the valve and pipe. It is then useful to calculate the drop pressure produced by the installation of a butterfly valve. However, in some projects, the starting datum is the allowable drop pressure and is then necessary to calculate the nominal diameter of the butterfly valve to be used.

Both the simplified formulas and the tables going with, will help to solve these problems.

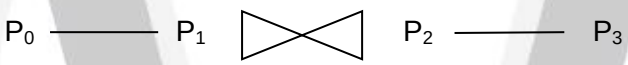

A) FLUID TO BE DRIVEN: LIQUIDS.

ΔP = $P_1 - P_2$ Drop pressure in kg/cm^2 in full open conditions.
d = Fluid density (at the temperature of the fluid).
Q = Flow in m^3/h.
Kv = Flow coefficient at full opening.

Simplified formula: $\Delta P = d \cdot (Q/Kv)^2$

B) FLUID TO BE DRIVEN: GAS.

DP = $P_1 - P_2$ (Drop pressure in bar).
P_1 = Upstream pressure in bar.
Q = Flow in m^3/h.
d = Fluid density with respect to the air.
T = Absolute temperature of fluid.
Kv = Flow coefficient at full opening.

Simplified formula: $DP = P_1 - \sqrt{P_1^2 - 2d \cdot T \cdot (Q/456 \cdot Kv)^2}$

VAMEIN DE ESPAÑA, S.A.
Calle Temple, 1 - 28760 - Tres Cantos
Madrid (ESPAÑA)
Phone. (+34) 91 803 45 17 – Email: comercial@vamein.es
www.vamein.com

LIMIT SPEEDS.

The **VAMEIN** butterfly valves are useful to be used with the following maximum line speeds:

- **FOR LIQUIDS:** 9 m/sec. (30 feet/sec.)
- **FOR GAS :** 54 m/sec. (175 feet/sec.)

For higher speeds, contact our Technical Department.

EXAMPLE TO CALCULATE THE DROP PRESSURE.

- Pipe of Nominal Diameter 500 mm (20"). VAMEIN butterfly valve DN-500 mm. (20").
- Fully open valve.
- Fluid : Water at ambient temperature (Density = 1).
- Flow = 3000 m^3/h.
- According to the value table : Kv = 19.000 m^3/h.

FORMULA: $\Delta P = d \cdot (Q/Kv)^2$

EXAMPLE: $\Delta P = 1 \cdot \left(\frac{3000}{19000}\right)^2 = 0{,}025$ Kg/cm^2.

N.B. With this datum, the fluid speed can be obtained in the drop pressure table. (5 m/sec. in this case).

VAMEIN DE ESPAÑA, S.A.
Calle Temple, 1 - 28760 - Tres Cantos
Madrid (ESPAÑA)
Phone. (+34) 91 803 45 17 – Email: comercial@vamein.es

7.2. Kv VALUE CHART (m^3/hour).

Values shown in the following table are in m^3/hour in order to make the pressure drop calculation easier.

D.N. VALVE		OPENING ANGLE							
mm	**Inch.**	**20º**	**30º**	**40º**	**50º**	**60º**	**70º**	**80º**	**90º**
50	2”	7	16	26	43	69	110	170	190
65	2½”	9	22	38	60	95	155	250	280
80	3”	14	33	57	95	150	240	370	430
100	4”	24	54	95	155	240	400	620	710
125	5”	38	86	155	240	390	640	950	1.100
150	6”	52	120	220	345	550	950	1.400	1.600
200	8”	95	220	345	600	950	1.600	2.400	2.800
250	10”	155	345	610	950	1.600	2.600	4.000	4.700
300	12”	220	510	860	1.500	2.300	3.800	5.900	6.900
350	14”	290	660	1.200	1.900	2.900	4.800	7.800	8.600
400	16”	380	860	1.600	2.400	3.900	6.400	9.500	11.200
450	18”	490	1.100	2.000	3.100	5.000	8.300	12.900	15.500
500	20”	610	1.400	2.500	4.000	6.200	10.300	15.500	19.000
600	24”	860	2.000	3.400	5.500	8.600	14.700	22.400	25.900
650	26”	980	2300	4000	6100	10400	16650	25850	31500
700	28”	1.100	2.600	4.600	6.700	12.200	18.600	29.300	37.100
750	30”	1.300	3.100	5.200	8.500	13.800	22.400	34.500	40.500
800	32”	1.800	3.600	6.600	9.700	16.600	28.300	43.200	52.300
900	36”	2.200	4.500	7.800	12.900	19.800	32.800	51.700	60.300
1.000	40”	3.100	5.300	8.700	16.000	24.100	42.200	62.100	78.400
1.050	42”	3.400	5.900	9.600	17.700	26.600	46.600	68.400	86.200
1.100	44”	3.800	6.500	10.600	19.500	29.300	51.300	75.100	95.100
1.200	48”	4.500	7.800	12.700	23.300	35.200	61.500	90.700	114.400

Kv (Cv) Flow coefficient value definition =Water flow value in l/ minute at 20º C (US gallons/minute at 60 º F), which passing through a valve creates a pressure drop of 1 $Kg/cm^{2.}$ (1 p.s.i.).

Kv – Cv Ratio: Cv (US Gallons / minute) = 1,155 · Kv (l/minute)

N.B.: This ratio is only valid for the above mentioned units.

VAMEIN DE ESPAÑA, S.A.
Calle Temple, 1 - 28760 - Tres Cantos
Madrid (ESPAÑA)
Phone. (+34) 91 803 45 17 – Email: comercial@vamein.es

7.3. PRESSURE DROP TABLE.

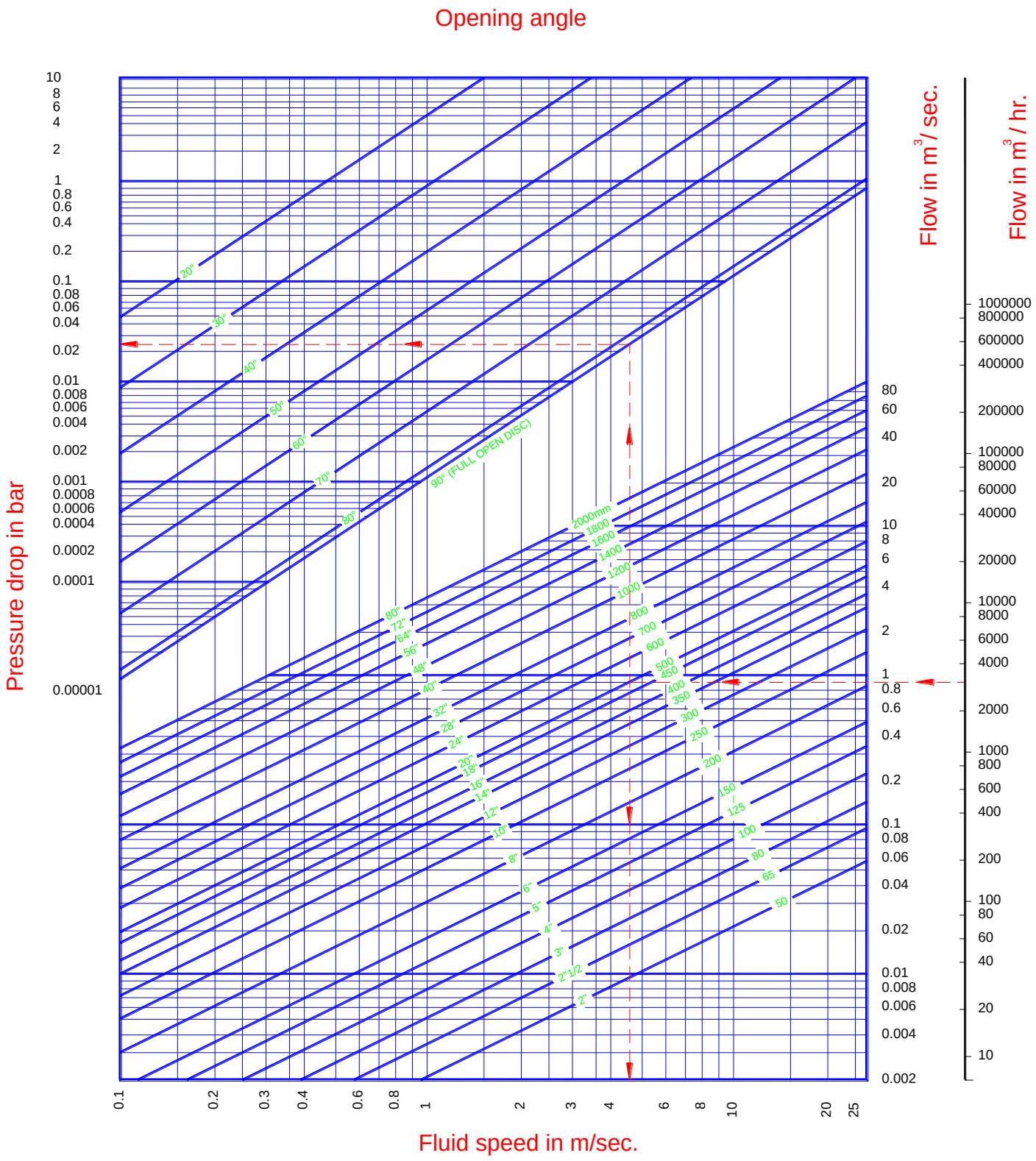

N.B.: Data valid for water at ambient temperature (20ºC)

VAMEIN DE ESPAÑA, S.A.
Calle Temple, 1 - 28760 - Tres Cantos
Madrid (ESPAÑA)
Phone. (+34) 91 803 45 17 – Email: comercial@vamein.es

7.4. CORRESPONDENCE CHART OF UNITS OF MEASUREMENT.

SURFACE UNITS	SYMBOL	SQUARE INCH	SQUARE FOOT	SQUARE YARD	SQUARE MILE	SQUARE CENTIMETRE	SQUARE METER	SQUARE KILOMETER	HECTARE
SQUARE INCH	sq.in	1	0,00694	0,000772	$2{,}4921 \cdot 10^{-10}$	6,4516	$6{,}4516 \cdot 10^{-4}$	$6{,}4516 \cdot 10^{-10}$	$6{,}4516 \cdot 10^{-8}$
SQUARE FOOT	sq.ft	144	1	0,1111	$3{,}588 \cdot 10^{-8}$	929,3	0,09293	$9{,}293 \cdot 10^{-8}$	$9{,}293 \cdot 10^{-6}$
SQUARE YARD	sq.yd	1.296	9	1	$3{,}228 \cdot 10^{-7}$	8.356,4	0,83564	$8{,}3564 \cdot 10^{-7}$	$8{,}3564 \cdot 10^{-5}$
SQUARE MILE	sq.mile	$4{,}01275 \cdot 10^{9}$	$2{,}7868 \cdot 10^{7}$	$3{,}0976 \cdot 10^{6}$	1	$2{,}59 \cdot 10^{10}$	$2{,}59 \cdot 10^{6}$	2,59	259
SQUARE CENTIMETRE	cm^2	0,155	0,00108	$1{,}1970 \cdot 10^{-4}$	$3{,}8610 \cdot 10^{-11}$	1	0,0001	10^{-10}	10^{-8}
SQUARE METER	m^2	1.550	10,765	1,1970	$3{,}8610 \cdot 10^{-7}$	10.000	1	10^{-6}	0,0001
SQUARE KILOMETER	Km^2	$1{,}550 \cdot 10^{9}$	$10{,}765 \cdot 10^{6}$	$1{,}1970 \cdot 10^{6}$	0,38610	10^{10}	10^{6}	1	100
HECTARE	Ha	$1{,}550 \cdot 10^{7}$	$10{,}765 \cdot 10^{4}$	$1{,}1970 \cdot 10^{4}$	0,003861	10^{8}	10.000	0,01	1

PRESSURE UNITS	SYMBOL	KILOGRAM X SQUARE CENTIMETER	POUND X SQUARE INCH	POUND X SQUARE FOOT	ATMOSPHERE	MILIMETER MERCURY COLUMN	METER WATER COLUMN
KILOGRAM X SQUARE CENTIMETER	Kg/cm^2	1	14,2234	2.048,17	0,967783	735,556	10
POUND X SQUARE INCH	psi	0,070307	1	144	0,06804	51,7116	0,70307
POUND X SQUARE FOOT	psf	$4{,}882 \cdot 10^{-4}$	0,006944	1	$4.725 \cdot 10^{-4}$	0,35911	0,004882
ATMOSPHERE	atm	1,03329	14,6969	2.116,35	1	760	10,3329
MILIMETER MERCURY COLUMN	mm Hg	0,001360	0,01934	2,78468	0,001316	1	0,01360
METER WATER COLUMN	m H_2O	0,10	1,42234	204,817	0,09678	73,5514	1

VOLUME UNITS	SYMBOL	CUBIC METER	CUBIC INCH	CUBIC FOOT	LITER	AMERICAN GALLON	IMPERIAL GALLON
CUBIC METER	m^3	1	61.023,38	35,315	1.000	264,179	219,969
CUBIC INCH	in^3	$1{,}6387 \cdot 10^{-5}$	1	$5{,}787 \cdot 10^{-4}$	0,016387	$4{,}329 \cdot 10^{-3}$	$3{,}6046 \cdot 10^{-3}$
CUBIC FOOT	ft^3	0,028316	1.728	1	28,316	7,4805	6,2288
LITER	L	10^{-3}	61,026	0,035316	1	0,264178	0,21997
AMERICAN GALLON	U.S.G.	$3{,}7853 \cdot 10^{-3}$	231	0,133681	3,7853	1	0,83268
GALÓN IMPERIAL	I.G.	$4{,}546 \cdot 10^{-3}$	277,42	0,16054	4,546	1,20094	1

VAMEIN DE ESPAÑA, S.A.
Calle Temple, 1 - 28760 - Tres Cantos
Madrid (ESPAÑA)
Phone. (+34) 91 803 45 17 – Email: comercial@vamein.es

WEIGHT UNITS	SYMBOL	KILOGRAM	MASS TECHNICAL UNIT	METRIC TON	OUNCE	POUND	QUINTAL
KILOGRAM	Kg	1	0,101968	0,0010	35,2734	2,2046	0,010
MASS TECHNICAL UNIT	U.T.M	9,807	1	0,00981	345.926	21,6208	0,09807
METRIC TON	t	1.000	101,968	1	35.273,4	2.204,62	10,00
OUNCE	Oz	28,35·10-3	0,002891	28,35·10-6	1	0,06250	28,35·10-5
POUND	Lb	0,453592	0,046252	4,5359 10-4	16,00	1	0,004536
QUINTAL	Q	100	10,19680	0,1000	3.527,34	220,462	1

LENGTH UNITS	SYMBOL	METER	FOOT	INCH	YARD	MILE	NAUTICAL MILE
METER	m	1	3,281	39,370	1,094	$6,214 \cdot 10^{-4}$	$5,40 \cdot 10^{-4}$
FOOT	ft	0,3048	1	12	0,3333	$1,894 \cdot 10^{-4}$	$1,646 \cdot 10^{-4}$
INCH	in	0,0254	0,0833	1	0,02778	$1,579 \cdot 10^{-5}$	$1,371 \cdot 10^{-5}$
YARD	yd	0,9144	3	36	1	$5,681 \cdot 10^{-4}$	$4,936 \cdot 10^{-4}$
MILE		**1.609,347**	**5.279**	**63.346,3**	**1.760**	**1**	**0,8688**
NAUTICAL MILE	-	1.852	6.076	72.913	2.026	1,151	1

FORCE UNITS	SÍMBOLO	NEWTON	KILOGRAM FORCE	POUND FORCE	DYNE
NEWTON	N	**1**	**0,1020**	**0,2249**	**105**
KILOGRAM FORCE	Kgf	**9,807**	**1**	**2,205**	**9,807·105**
POUND FORCE	lbf	4,4481	0,4536	1	$4,4481 \cdot 10^{5}$
DYNE	dyn	10^{-5}	$1,020 \cdot 10^{-6}$	$2,249 \cdot 10^{-6}$	1

VAMEIN DE ESPAÑA, S.A.
Calle Temple, 1 - 28760 - Tres Cantos
Madrid (ESPAÑA)
Phone. (+34) 91 803 45 17 – Email: comercial@vamein.es

MULTIPLY		BY	TO OBTAIN	
UNIT	**SYMBOL**	**X**	**UNIT**	**SYMBOL**
1000 POUNDS PER SQUARE INCH	p.s.i.	6,895	MEGA PASCAL	Mpa
ACRE	-	4.047	SQUARE METER	m^2
ATMOSPHERE	atm	101,325	KILO PASCAL	Kpa
BAR	bar	100	KILO PASCAL	Kpa
CUBIC INCH	in^3	16.387	CUBIC MILIMITERS	mm^3
CUBIC YARD	yd^3	0,7646	CUBIC METERS	m^3
CUBIT FOOT	ft^3	0,02832	CUBIC MILIMITERS	m^3
Cv (S. GALLONS PER MINUTE)	Cv	0,8658	Kv (liters/minute)	Kv
FEET MERCURY COLUMN	In.Kg	3,386	KILO PASCAL	Kpa
FEET PER SECOND	ft/s	0,3048	METERS PER SECOND	m/s
FEET PER SECOND	ft/min	0,00508	METERS PER SECOND	m/s
FEET WATER COLUMN AT 20ºC	ft H_2O	2,984	KILO PASCAL	Kpa
KILOGRAM FORCE PER SQUARE CENTIMETER	Kgf/cm^2	98.07	KILO PASCAL	Kpa
HORSE POWER	hp	0,7457	KILOWATT	KW
IMPERIAL GALLON AT 20ºc	I.G	4,536	KILOGRAMS	Kg
IMPERIAL GALLON PER MINUTE	gal/min	0,272765	CUBIC METERS PER HOUR	m^3/h
IMPERIAL GALLON PER MINUTE	gal/min	0,0758	LITERS PER SECOND	L/s
KILOGRAM FORCE CENTIMETER	Kgf.cm	0,09807	NEWTON PER METER	N.m
KILOGRAM FORCE METER	Kgf. m	9,807	NEWTON PER METER	N.m
POUND FORCE PER INCH	lbf/in	175,1	NEWTON METER	N/m
LITTER OF WATER AT 4ºC	L	1	KILOGRAMS	Kg
LONG TON (2240Llb)	Short Ton	1.016,05	KILOGRAMS	Kg
METER WATER COLUMN AT 20ºC	m H2O	9,79	KILO PASCAL	Kpa
MILES PER HOUR	miles/hour	0,4470	METERS PER SECOND	m/s
MILES PER HOUR	miles/hour	1,609	KILOMETERS PER HOUR	Km/h
MILIMETER MERCURY COLUMN	mm.Hg	0,1333	KILO PASCAL	Kpa
NEWTON SQUARE METER	N/m^2	1	PASCAL	Pa
PASCAL	Pa	0,000145	POUND FORCE PER SQUARE INCH	lbf/in^2
POUND FORCE PER FOOT	lbf/ft	14,59	NEWTON METER	N/m
POUND FORCE PER FOOT	lbf/ft	1,356	NEWTON PER METER	N.m
POUND FORCE PER FOOT	lbf/ft	13,83	KILOGRAM FORCE PER CENTIMETER	Kgf.cm
POUND FORCE PER INCH	Lbf/inch	0,1130	NEWTON PER METER	N.m
POUND FORCE PER INCH	Lbf/inch	1,152	KILOGRAMFORCE PER CENTIMETER	Kgf.cm
POUND FORCE PER SQUAQRE INCH	lbf/in^2	6,895	KILO PASCAL	Kpa
POUND FORCE PER SQUARE FOOT	lbf/ft2	47,88	PASCAL	Pa
POUND PER CUBIC INCH	Lb/in3	27,68	TON PER CUBIC METER	t/m3
POUND PER CUBIC YARD	Lb/yd3	0,5933	KILOGRAM PER CUBICMETER	Kg/m3
POUND PER CUBIT FOOT	Lb/ft3	16,02	KILOGRAM PER CUBIC METER	Kg/m3
POUND PER FOOT	lb /ft	1,488	KILOGRAM PER METER	Kg/m
SHORT TON (2000lb)	Long Ton	907,2	KILOGRAMS	Kg
SQUARE INCH	sg.in	645,16	SQUARE MILIMETER	mm^2
TORR (VACUUM)	torr	0,1333	KILO PASCAL	Kpa

VAMEIN DE ESPAÑA, S.A.
Calle Temple, 1 - 28760 - Tres Cantos
Madrid (ESPAÑA)
Phone. (+34) 91 803 45 17 – Email: comercial@vamein.es

SYMBOL	DEFINITION	TEMPERATURE	ABSOLUTE PRESSURE
N.T.P.	NORMAL TEMPERATURE AND PRESSURE	20ºC	1,013 bar
M.S.C.	METRIC STANDARD CONDITIONS	15ºC	1,013 bar
S.T.P.	STANDARD TEMPERATURE AND PRESSURE	0ºC	1,013 bar

TEMPERATURE CONVERSION FORMULES	
FORMULA TO CONVERT CELSIUS TO FAHRENHEIT	**ºF = 9/5 ºC + 32**
FORMULA TO CONVERT FAHRENHEIT TO CELSIUS	**ºC = 5/9 (ºF - 32)**

TORQUE CONVERSION FACTORS:

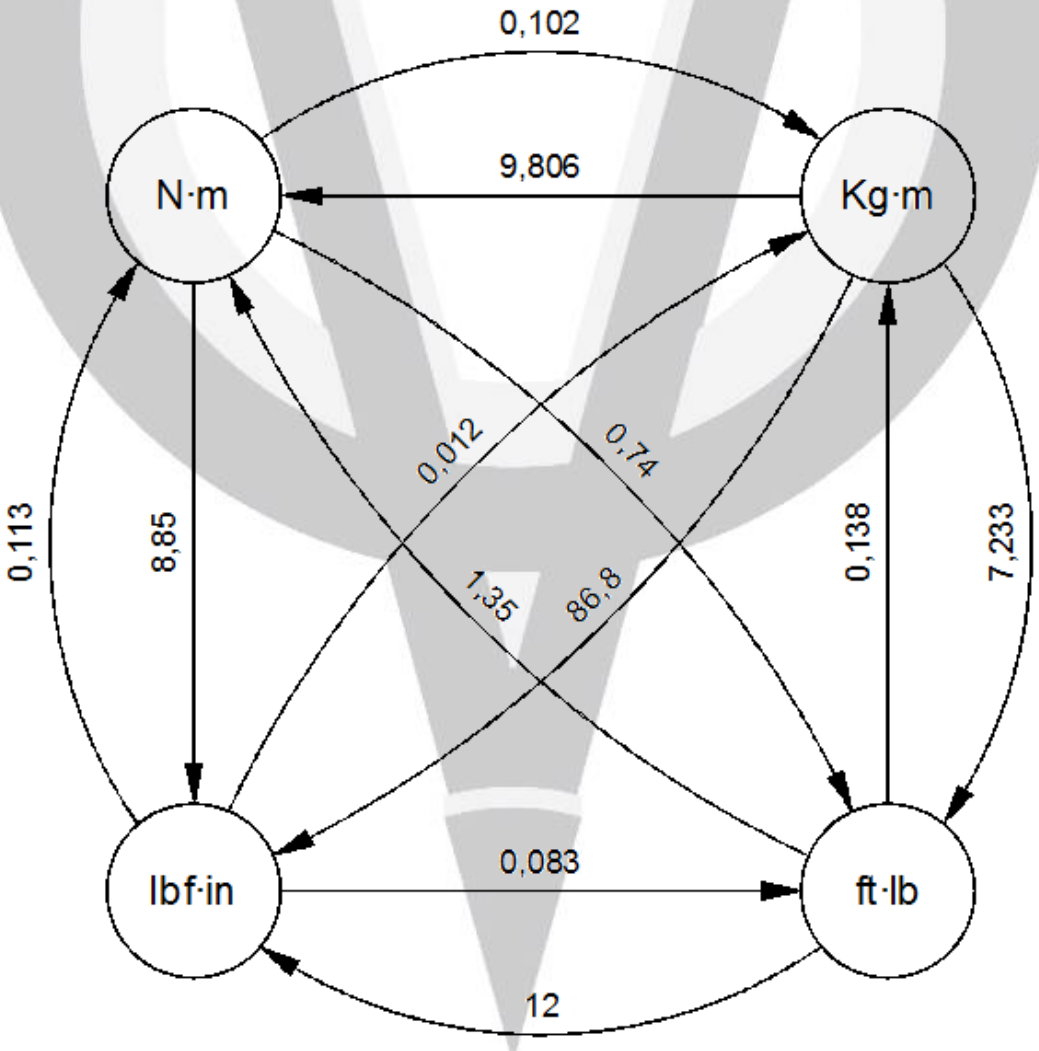

VAMEIN DE ESPAÑA, S.A.
Calle Temple, 1 - 28760 - Tres Cantos
Madrid (ESPAÑA)
Phone. (+34) 91 803 45 17 – Email: comercial@vamein.es

8. ASSEMBLY AND BOLTING LIST.

8.1. FLANGE DIMENSIONS 2
8.2. ASSEMBLY INSTRUCTIONS..... 3
8.3. BUTTERFLY VALVE POSITIONING. 5
8.4. PIPE DISASSEMBLY IN THE VALVE DOWNSTREAM AREA. 5
8.5. TECHNICAL DATA. (INSTALLATION EXAMPLES) ..... 6 to 9
8.6. BOLTING FOR INSTALLATION OF THE VAMEIN BUTTERFLY VALVES. ..... 10 to 14
8.7. FLANGE DRILLING STANDARDS SUITABLE TO VAMEIN BUTTERFLY VALVES. ..... 15 to 16
8.8. TIGHTENING TORQUE FIGURES OF SCREWS 17

Based on many years of experience in the manufacturing of butterfly valves, we are able to say that many of the problems arisen are due to the incorrect installation. This is why we believe it is very important that all the Distributors of our valves train their Clients on how to install the **VAMEIN** butterfly valve correctly, which makes the job easier and safer..

The **VAMEIN** butterfly valve has been specially designed to be installed between two flanges without the need of any joints between the valve and the piping, as this function is done by the seat.

The **VAMEIN** butterfly valve can be installed in any flow direction thanks to its special design, which converts it in a bi-directional valve.

The body design makes it's installing easier due to its low weight and its guidance holes to correctly guide the bolts.

The valve-actuator unit does not need any kind of brackets for its installation. excepting large diameter valves with special or oversized actuators.

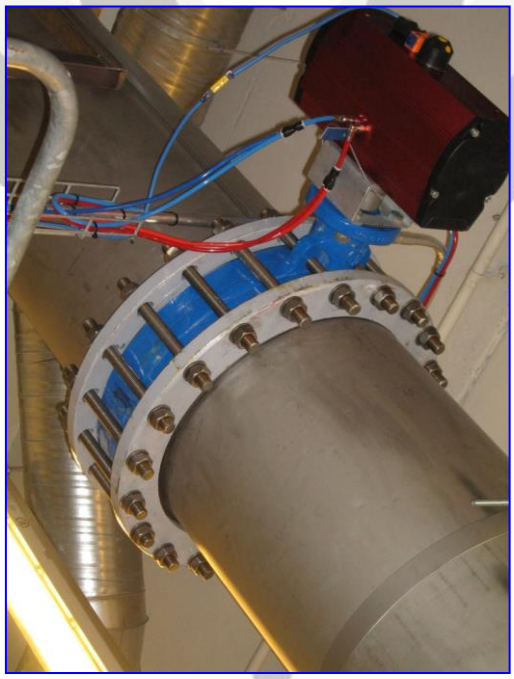

VAMEIN DE ESPAÑA, S.A.
Calle Temple, 1 - 28760 - Tres Cantos
Madrid (ESPAÑA)
Phone. (+34) 91 803 45 17 – Email: comercial@vamein.es

8.1. FLANGE DIMENSIONS.

On installing a valve, it is very important to have the flange dimensions in mind, as their inner diameter must be between the maximum and minimum values shown in the table indicated below and document drawings.

The inner diameter of the flanges must be bigger than "Q" shown in our dimensional drawings, and it can be defined as the chord diameter to valve's face and serving to make the calculation of disc movement inside the pipe easier. If the inner diameter of the flanges is smaller than "Q", the disc will interfere with the flange or the pipe when opening. This may cause damage or may not allow the valve to open or close. The maximum of the inner diameter must not be exceeded, as if the seat liner is not compressed enough, the watertightness with the face of the flanges would not be achieved and it could also come out from its body housing when opening or closing the valve.

DN VALVE mm	DN VALVE Inch.	OUTER DIAMETER OF SEAT LINER	INNER DIAMETER OF SEAT LINER	Dim. "Q"
50	**2"**	83	52	31
65	**2½"**	103	67	51
80	**3"**	119	83	70
100	**4"**	138	102	90
125	**5"**	166	127	116
150	**6"**	191	153	143
200	**8"**	244	203	195
250	**10"**	301	253	243
300	**12"**	351	303	293
350	**14"**	400	337	333
400	**16"**	454	390	382
450	**18"**	510	444	436
500	**20"**	564	490	480
600	**24"**	657	583	566
650	**26"**	721	644	624
700	**28"**	758	684	667
750	**30"**	859	753	739
800	**32"**	870	783	759
900	**36"**	970	884	855
1.000	**40"**	1.100	996	962
1.050	**42"**	1.150	1.043	1.011
1.100	**44"**	1.200	1.085	1.050
1.200	**48"**	1.278	1.188	1.164

Dimensions in mm. For DN > 1200 consult our Technical Dept.

VAMEIN DE ESPAÑA, S.A.
Calle Temple, 1 - 28760 - Tres Cantos
Madrid (ESPAÑA)
Phone. (+34) 91 803 45 17 – Email: comercial@vamein.es

8.2. ASSEMBLY INSTRUCTIONS.

TO ASSEMBLE BETWEEN FLANGES WITH BRACES OR BOLTS.

The **VAMEIN** valve is installed through the compression between the valve body and the pipe flanges and no joints are required.

BEFORE ASSEMBLING:

- Verify that there are no welding slags or metallic particles on the face of the flanges.
- Verify that the flanges are separated enough to allow the valve to be slotted without damaging the seat.
- Verify that the inner diameter both of the flanges and pipe allows the movement of the disc, and check that the inner diameter of pipe is within the values of the following table.

DN VALVE mm Inch.		MAXIMUM INNER DIAMETER OF FLANGE / PIPE	MINIMUM INNER DIAMETER OF FLANGE / PIPE	Dim. "Q"
50	**2"**	62	42	31
65	**2½"**	77	59	51
80	**3"**	91	76	70
100	**4"**	116	95	90
125	**5"**	144	121	116
150	**6"**	171	146	143
200	**8"**	223	197	195
250	**10"**	277	249	243
300	**12"**	328	297	293
350	**14"**	372	347	333
400	**16"**	423	396	382
450	**18"**	474	446	436
500	**20"**	524	495	480
600	**24"**	613	590	566
650	**26"**	645	635	624
700	**28"**	715	692	667
750	**30"**	787	745	739
800	**32"**	817	793	759
900	**36"**	919	890	855
1.000	**40"**	1.020	994	962
1.050	**42"**	1.070	1.044	1.011
1.100	**44"**	1.110	1.090	1.050
1.200	**48"**	1.215	1.195	1.164

Dimensions in mm. For DN > 1200 consult our Technical Dept.

N.B.: To obtain the best working conditions, flanges with the biggest surface contacting the seat must be selected; this way, accidental getting out of the seat from its housing will be avoided and the maximum permissible design pressure can be achieved.
For this reason, the following rule must be taken into consideration:

"THE SMALLER CONTACT SURFACE WITH THE SEAT THE FLANGE HAS, THE LOWER WORKING PRESSURE THE VALVE HAS".

VAMEIN DE ESPAÑA, S.A.
Calle Temple, 1 - 28760 - Tres Cantos
Madrid (ESPAÑA)
Phone. (+34) 91 803 45 17 – Email: comercial@vamein.es

EXAMPLES.

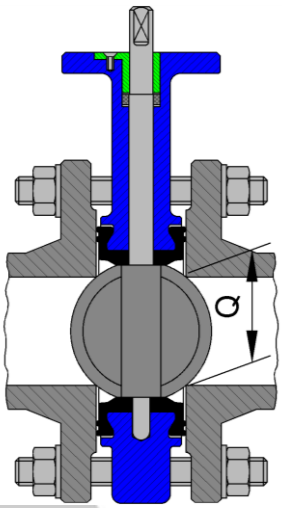

- Too small flanges:

If the inner diameter of flanges is smaller than the dimension “Q”, the disc will touch these flanges or the pipe during opening. This will cause damages and will not allow the valve to open or close properly.

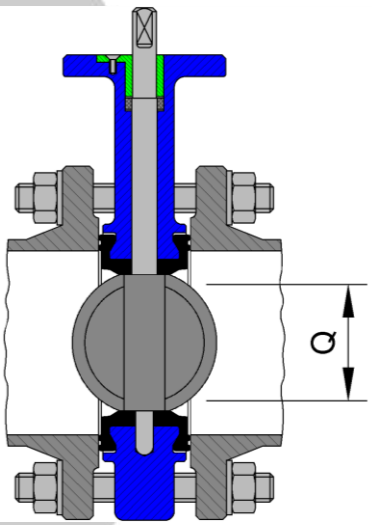

- Too big flanges:

If the inner diameter of flanges is bigger than the one indicated as maximum in CHART 2 of the previous page, the liner will not be compressed enough and will not reach the correct water tightness with the flange surfaces. Furthermore, there is the risk that the liner will come off from its housing during an open / close operation of the valve.

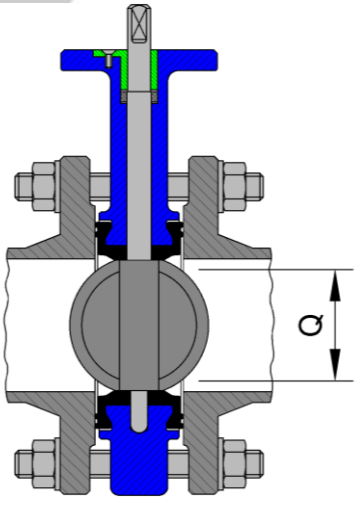

- Right flanges:

In order to achieve the maximum contact surface of the flange with the liner and thus reaching the maximum working pressure of the valve it is necessary to select flanges where the inner diameter is as close as possible to the minimum diameter indicated in CHART of previous page, in order to get the maximum contact surface of the flange with the liner and thus to be able to reach the maximum admissible working pressure of the valve.

We feel necessary to insist on this matter once again repeating the following proportional rule: **“THE SMALLER CONTACT SURFACE OF FLANGES WITH THE LINER, THE LOWER THE WORKING PRESSURE OF THE VALVE”.**

VAMEIN DE ESPAÑA, S.A.
Calle Temple, 1 - 28760 - Tres Cantos
Madrid (ESPAÑA)
Phone. (+34) 91 803 45 17 – Email: comercial@vamein.es

DURING THE ASSEMBLY:

- Place the valve half closed to avoid the butterfly to project out of the valve's body.
- Place the valve between the two flanges and center it by means of some braces.
- Open the valve to its full extent to ensure that the disc has no contact with the inner flange or pipe diameter.
- Tighten all the studs and/or bolts in an opposed sequence.
- Operate the valve several times to ensure the free rotation of the disc.
- With DN-500 mm (20") valves and above it is advisable to use a telescopic disassembling spool to make the assembly easier.
- From DN-600 mm (24") onwards, the valve must be installed with its shaft parallel to the ground to ease and secure the support on the bearings, gaining better movement of the disc, avoiding it from resting its weight on the seat or the cover plates, this way you also gain the advantage of the seat selfcleaning, removing any dirt from the rotation area, preventing it from any damage.

8.3. BUTTERFLY VALVE POSITIONING.

The **VAMEIN** butterfly valves up to 500 mm (20") Nominal Diameter can be installed in a vertical or horizontal position. Nevertheless, from a mechanical point of view the optimum position for the shaft is to be in a horizontal position as it allows the weight of the butterfly to rest on the valve bearings. From a hydraulic point of view, the horizontal position allows the fluid to have a cleaning effect on the interior pivot point of the valve.

The circuit configuration, in the case of Tees or elbows, especially when the fluid is flowing fast, imposes some conditions on the positioning of the valves:

- Avoid close proximity to an elbow, especially when installed downstream.

- If the valve is close to an elbow, the shaft of the disc must be placed in the elbows plan to avoid the fluid’s vein coming loose and its acceleration effects.

8.4. PIPE DISASSEMBLY IN THE VALVE DOWNSTREAM AREA.

The following instructions are for disassembling the pipe in the valve downstream area without having to empty the circuit.

The ideal valve for this type of disassembly is the "LUG" Type, 500 series.

However, before disassembling any pipe or valve in a line, the following safety measures must be taken:

- Make sure that there is not overpressure in the circuit allowing water to hammer while disassembling.
- Make sure that the upstream pressure does not exceed 0,35 times the maximum using pressure.
- Take into account that the valve will not have the same resistance it would have as if it were between flanges.

VAMEIN DE ESPAÑA, S.A.
Calle Temple, 1 - 28760 - Tres Cantos
Madrid (ESPAÑA)
Phone. (+34) 91 803 45 17 – Email: comercial@vamein.es

8.5. TECHNICAL DATA (INSTALLATION EXAMPLES).

8.5.1. ASSEMBLY INSTRUCTIONS (CORRECT INSTALLATION).

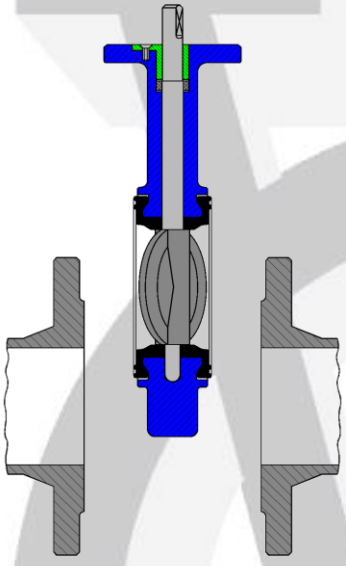

A. Pipe displaced to enable free access to the valve.

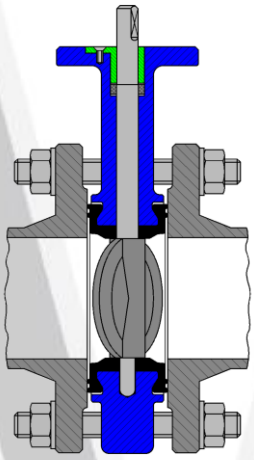

B. Valve in the edge of the liner to reduce semi-closed position to protect the disc, reduce the friction of during the installation and help the initial torque

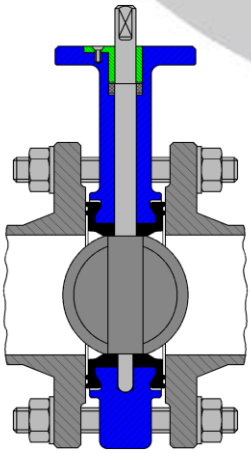

C. Disc should be turned to the full open position after the alignment with flanges and before tightening the bolts, which should be done crosswise.

VAMEIN DE ESPAÑA, S.A.
Calle Temple, 1 - 28760 - Tres Cantos
Madrid (ESPAÑA)
Phone. (+34) 91 803 45 17 – Email: comercial@vamein.es

8.5.2. ASSEMBLY INSTRUCTIONS (INCORRECT INSTALLATION)..

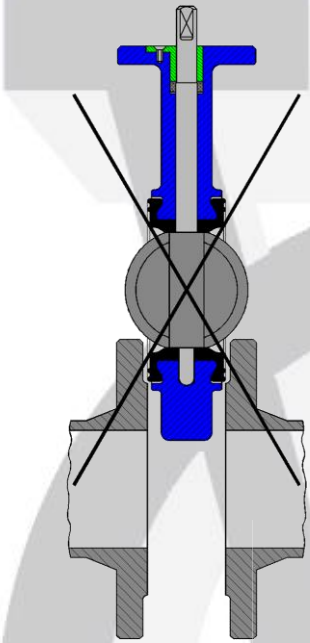

A. Pipe insufficiently displaced; the liner can be damaged and squeezed out from its housing. Disc in the open position will touch the flange and will be damaged.

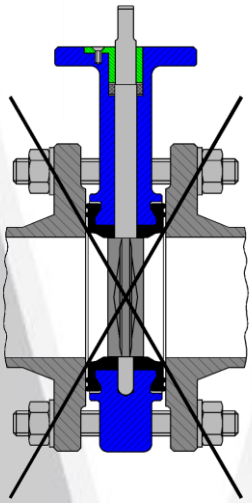

B. The disc in the fully closed position will cause liner distortion. When the flanges are compressed, the rubber distorts creating an excessive initial torque for the operation

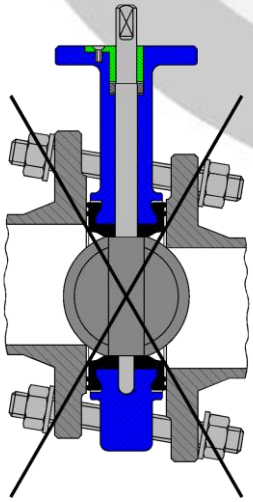

C. Incorrect pipe alignment may cause interferences between disc edge and flange inner faces, leading to excessive torque and damages to the disc and its coating, and therefore failures in the valve tightness.

VAMEIN DE ESPAÑA, S.A.
Calle Temple, 1 - 28760 - Tres Cantos
Madrid (ESPAÑA)
Phone. (+34) 91 803 45 17 – Email: comercial@vamein.es

8.5.3. INSTALLATIONS EXAMPLES.

CENTRIFUGAL PUMP

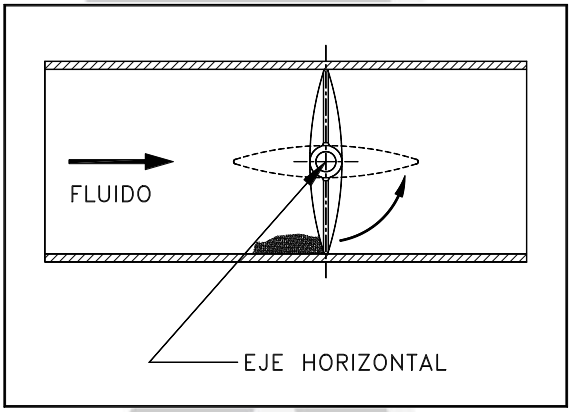

CORRECT INSTALLATION

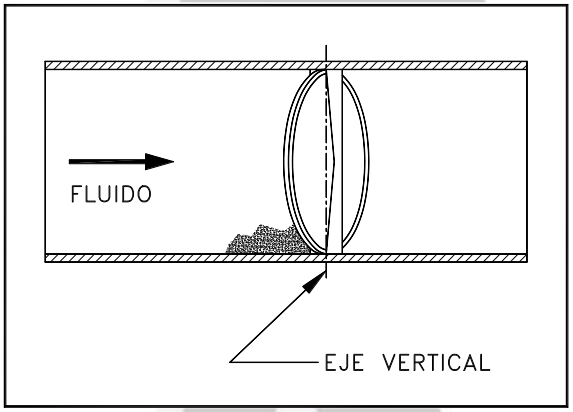

INCORRECT INSTALLATION

CENTRIFUGAL PUMP

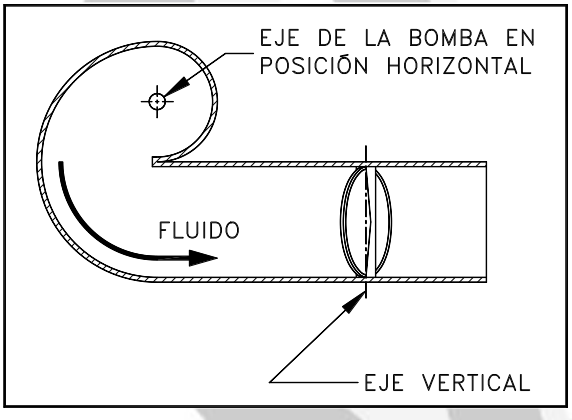

CORRECT INSTALLATION

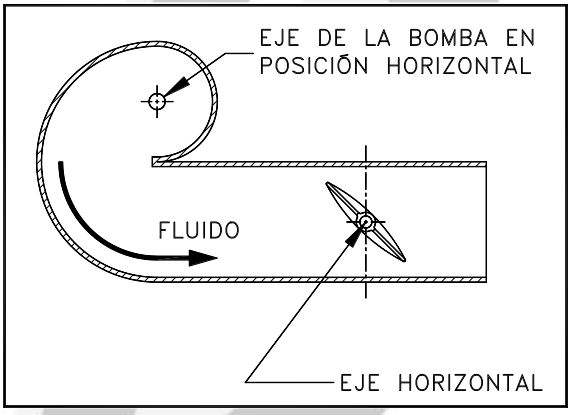

INCORRECT INSTALLATION

AXIAL PUMP

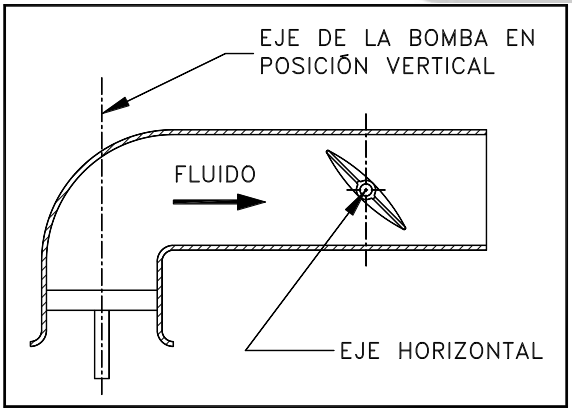

CORRECT INSTALLATION

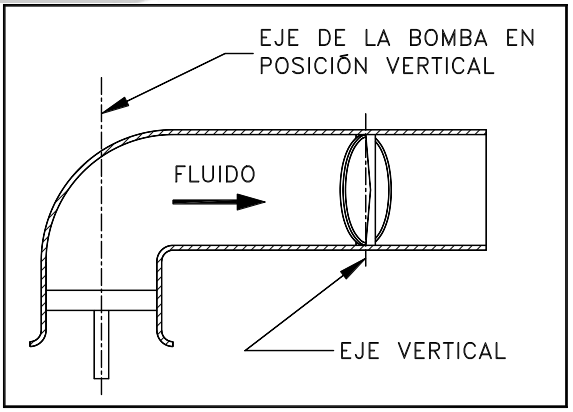

INCORRECT INSTALLATION

VAMEIN DE ESPAÑA, S.A.
Calle Temple, 1 - 28760 - Tres Cantos
Madrid (ESPAÑA)
Phone. (+34) 91 803 45 17 – Email: comercial@vamein.es

BEND

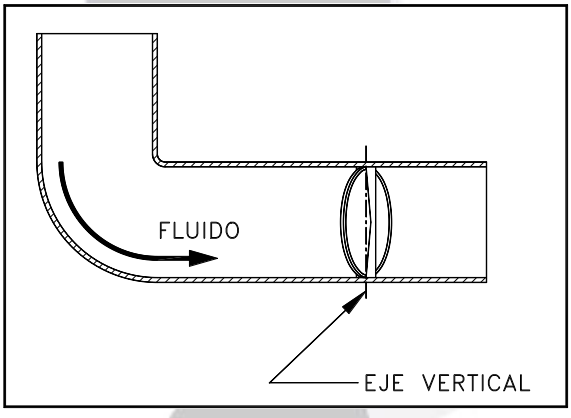

CORRECT INSTALLATION

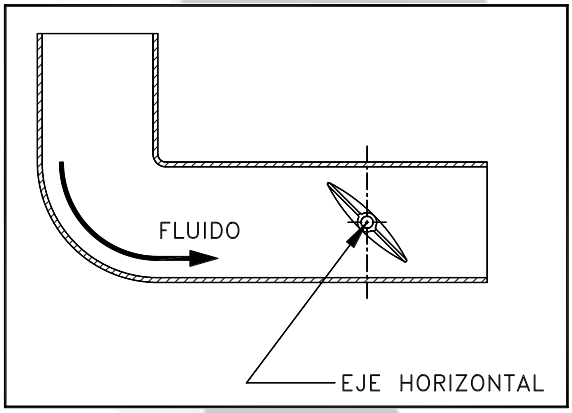

INCORRECT INSTALLATION

TEE

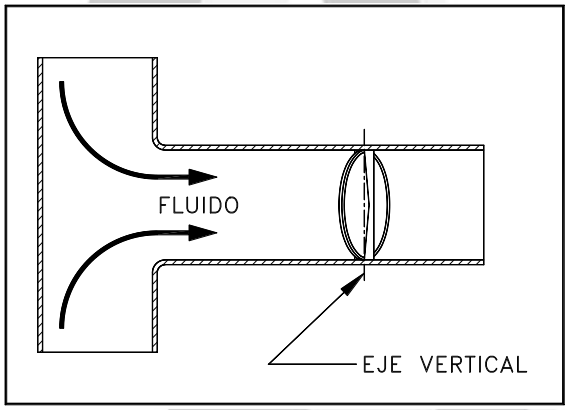

CORRECT INSTALLATION

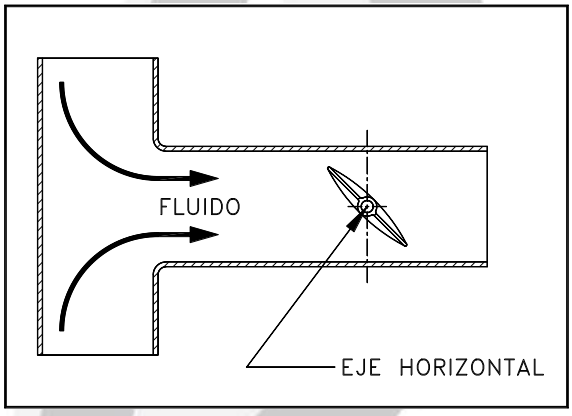

INCORRECT INSTALLATION

VAMEIN DE ESPAÑA, S.A.
Calle Temple, 1 - 28760 - Tres Cantos
Madrid (ESPAÑA)
Phone. (+34) 91 803 45 17 – Email: comercial@vamein.es

8.6. BOLTING FOR INSTALLATION OF THE VAMEIN BUTTERFLY VALVES.

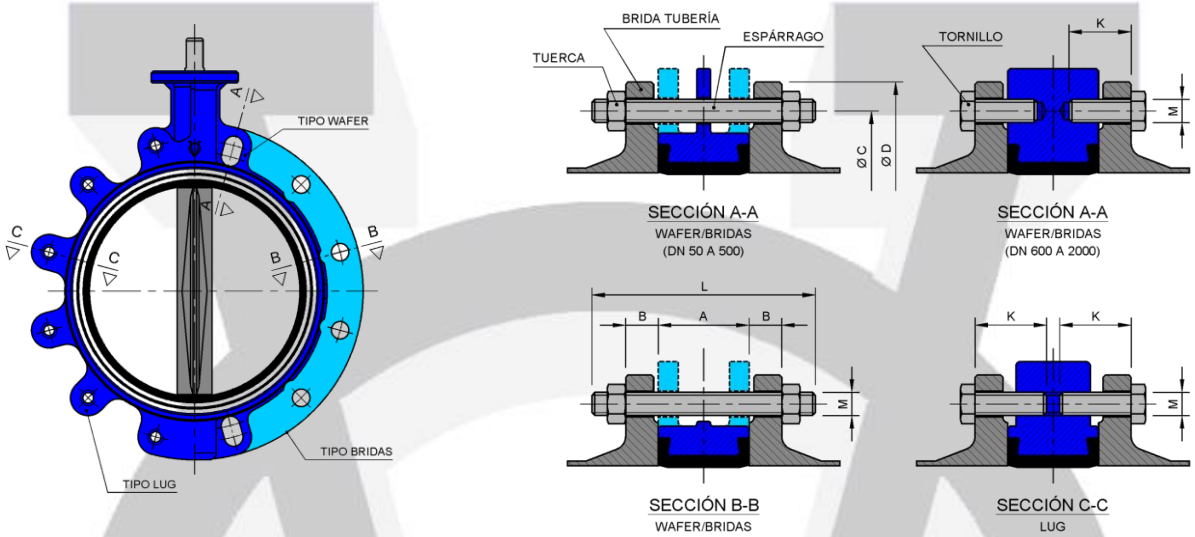

UNE EN 1092-1 PN-6 STANDARD

VALVE			FLANGES (DIN-2631)				BOLTING FOR WAFER AND FLANGED TYPE								BOLTS FOR LUG TYPE		
							STUD BOLTS			NUTS		SCREWS			SCREWS		
DN		FACE TO FACE	THICKNESS	BOLT CENTRE	QUANTITY	EXTERNAL DIAMETER	LENGHT	THREAD	QUANTITY	THREAD	QUANTITY	LENGHT	THREAD	QUANTITY	LENGHT	THREAD	QUANTITY
mm	Inch	A	B	Ø C	Nº	Ø D	L	M	Nº	M	Nº	K	M	Nº	K	M	Nº
50	2”	43	14	110	4	140	120	M-12	4	M-12	8						
65	2½”	46	14	130	4	160	125	M-12	4	M-12	8						
80	3”	46	16	150	4	190	130	M-16	4	M-16	8				40	M-16	8
100	4”	52	16	170	4	210	135	M-16	4	M-16	8						
125	5”	56	18	200	8	240	140	M-16	8	M-16	16						
150	6”	56	18	225	8	265	150	M-16	8	M-16	16						
200	8”	60	20	280	8	320	160	M-16	8	M-16	16						
250	10”	68	22	335	12	375	170	M-16	12	M-16	24						
300	12”	78	22	395	12	440	180	M-20	12	M-20	24						
350	14”	78	-	-	-	-	-	-	-	-	-						
400	16”	102	-	-	-	-	-	-	-	-	-						
(*)450	18”	113	-	-	-	-	-	-	-	-	-						
500	20”	126	-	-	-	-	-	-	-	-	-						
600	24”	154	-	-	-	-	-	-	-	-	-	-	-	-	-	-	-
700	28”	165	-	-	-	-	-	-	-	-	-	-	-	-			
750	30”	176	-	-	-	-	-	-	-	-	-	-	-	-			
800	32”	215	-	-	-	-	-	-	-	-	-	-	-	-			
900	36”	246	-	-	-	-	-	-	-	-	-	-	-	-			
1000	40”	280	-	-	-	-	-	-	-	-	-	-	-	-			
1050	42”	280	-	-	-	-	-	-	-	-	-	-	-	-			
1100	44”	280	-	-	-	-	-	-	-	-	-	-	-	-			
1200	48”	254	-	-	-	-	-	-	-	-	-	-	-	-			

(*): As per B.S. 4504 PN-6 Dimensions in mm. For DN > 1200 consult our Technical Dept.

VAMEIN DE ESPAÑA, S.A.
Calle Temple, 1 - 28760 - Tres Cantos
Madrid (ESPAÑA)
Phone. (+34) 91 803 45 17 – Email: comercial@vamein.es

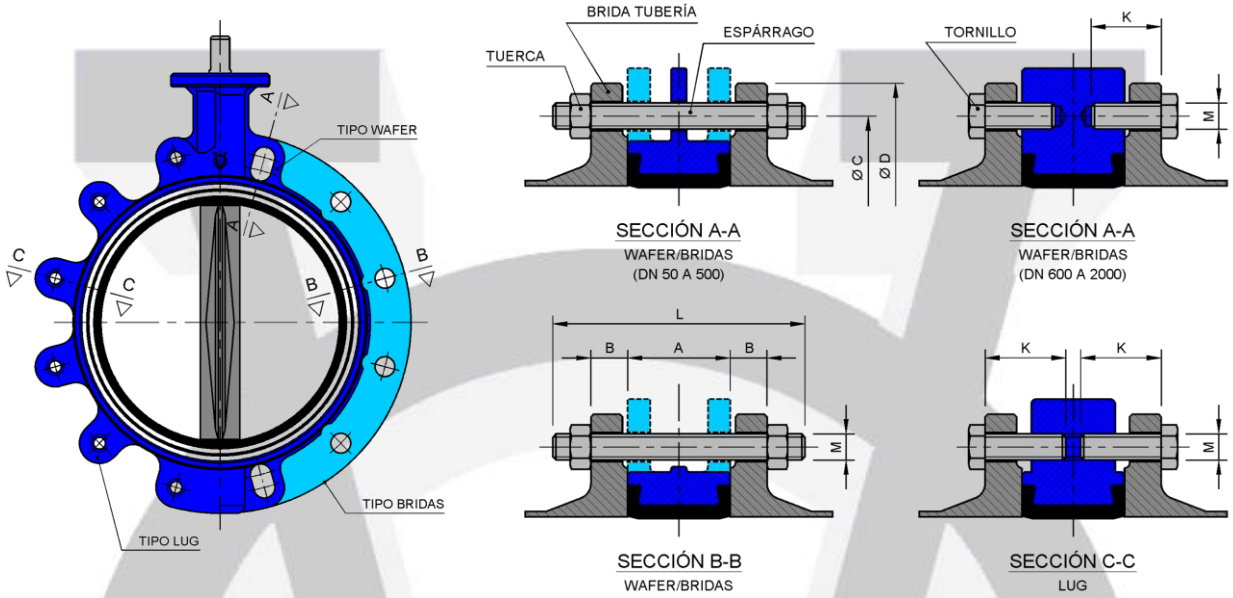

UNE EN 1092-1 PN-10 STANDARD

VALVE			FLANGES (DIN-2632)				BOLTING FOR WAFER AND FLANGED TYPE								BOLTS FOR LUG TYPE		
							STUD BOLTS			NUTS		SCREWS			SCREWS		
DN		FACE TO FACE	THICKNESS	BOLT CENTRE	QUANTITY	EXTERNAL DIAMETER	LENGHT	THREAD	QUANTITY	THREAD	QUANTITY	LENGHT	THREAD	QUANTITY	LENGHT	THREAD	QUANTITY
mm	Inch	A	B	Ø C	Nº	Ø D	L	M	Nº	M	Nº	K	M	Nº	K	M	Nº
50	2”	43	18	125	4	165	120	M-16	4	M-16	8				35	M-16	8
65	2½”	46	18	145	4	185	125	M-16	4	M-16	8				35	M-16	8
80	3”	46	20	160	8	200	130	M-16	8	M-16	16				40	M-16	16
100	4”	52	20	180	8	220	135	M-16	8	M-16	16				40	M-16	16
125	5”	56	22	210	8	250	140	M-16	8	M-16	16				45	M-16	16
150	6”	56	22	240	8	285	150	M-20	8	M-20	16				45	M-20	16
200	8”	60	24	295	8	340	160	M-20	8	M-20	16				50	M-20	16
250	10”	68	26	350	12	395	170	M-20	12	M-20	24				55	M-20	24
300	12”	78	26	400	12	445	180	M-20	12	M-20	24				60	M-20	24
350	14”	78	26	460	16	505	180	M-20	16	M-20	32				60	M-20	32
400	16”	102	26	515	16	565	215	M-24	16	M-24	32				70	M-24	32
450	18”	113	28	565	20	615	230	M-24	20	M-24	40				80	M-24	40
500	20”	126	28	620	20	670	240	M-24	20	M-24	40				85	M-24	40
600	24”	154	30	725	20	780	280	M-27	16	M-27	32	75	M-27	8	75 95	M-27 M-27	8 32
700	28”	165	35	840	24	895	295	M-27	20	M-27	40	75	M-27	8			
*750	30”	176	-	-	-	-	-	-	-	-	-	-	-	-			
800	32”	215	38	950	24	1015	355	M-30	20	M-30	40	90	M-30	8			
900	36”	246	38	1050	28	1115	390	M-30	24	M-30	48	90	M-30	8			
1000	40”	280	44	1160	28	1230	430	M-33	24	M-33	48	90	M-33	8			
*1050	42”	280	-	-	-	-	-	-	-	-	-	-	-	-			
*1100	44”	280	-	-	-	-	-	-	-	-	-	-	-	-			
1200	48”	254	55	1380	32	1455	420	M-36	28	M-36	56	105	M-36	8			

*: DN not defined by EN1092-1 PN-10 Dimensions in mm. For DN > 1200 consult our Technical Dept.

VAMEIN DE ESPAÑA, S.A.
Calle Temple, 1 - 28760 - Tres Cantos
Madrid (ESPAÑA)
Phone. (+34) 91 803 45 17 – Email: comercial@vamein.es

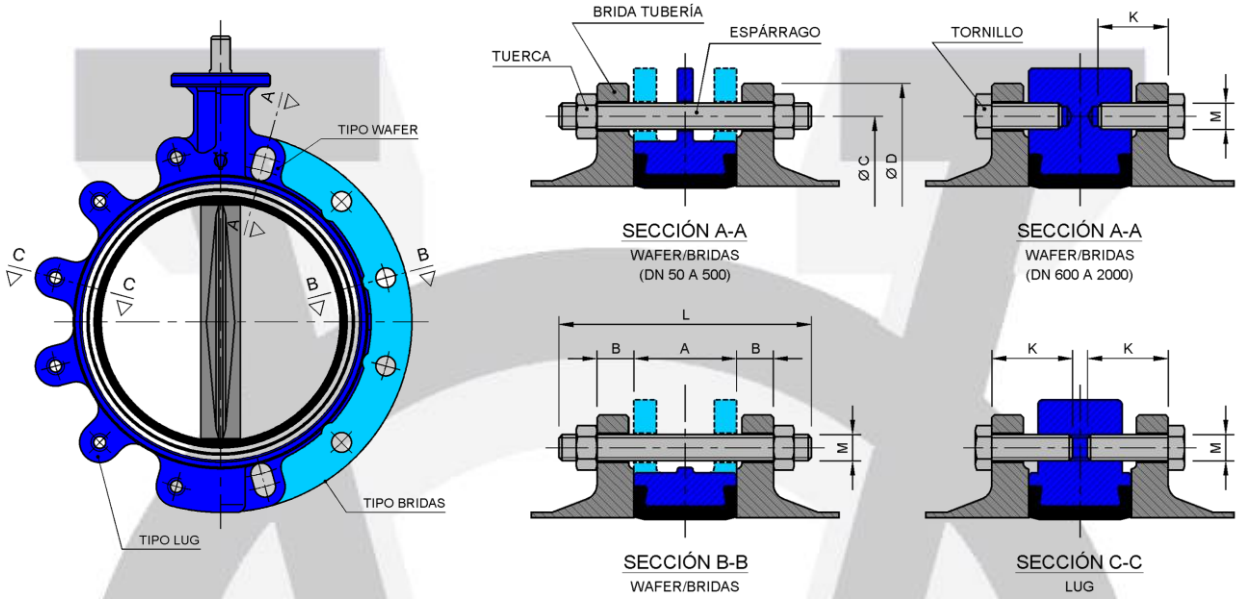

UNE EN 1092-1 PN-16 STANDARD

VÁLVE			FLANGES (DIN-2633)				BOLTING FOR WAFER AND FLANGED TYPE								BOLST FOR LUG TYPE		
							STUD BOLTS			NUTS		SCREWS			SCREWS		
DN		FACE TO FACE	THICKNESS	BOLT CENTRE	QUANTITY	EXTERNAL DIAMETER	LENGHT	THREAD	QUANTITY	THREAD	QUANTITY	LENGHT	THREAD	QUANTITY	LENGHT	THREAD	QUANTITY
mm	Inch	A	B	Ø C	Nº	Ø D	L	M	Nº	M	Nº	K	M	Nº	K	M	Nº
50	2”	43	18	125	4	165	120	M-16	4	M-16	8				35	M-16	8
65	2½”	46	18	145	4	185	125	M-16	4	M-16	8				35	M-16	8
80	3”	46	20	160	8	200	130	M-16	8	M-16	16				40	M-16	16
100	4”	52	20	180	8	220	135	M-16	8	M-16	16				40	M-16	16
125	5”	56	22	210	8	250	140	M-16	8	M-16	16				45	M-16	16
150	6”	56	22	240	8	285	150	M-20	8	M-20	16				45	M-20	16
200	8”	60	24	295	12	340	160	M-20	12	M-20	24				50	M-20	24
250	10”	68	26	355	12	405	180	M-24	12	M-24	24				55	M-24	24
300	12”	78	28	410	12	460	195	M-24	12	M-24	24				65	M-24	24
350	14”	78	30	470	16	520	195	M-24	16	M-24	32				65	M-24	32
400	16”	102	32	525	16	580	235	M-27	16	M-27	32				80	M-27	32
450	18”	113	34	585	20	640	250	M-27	20	M-27	40				85	M-27	40
500	20”	126	36	650	20	715	270	M-30	20	M-30	40				95	M-30	40
600	24”	154	40	770	20	840	295	M-33	16	M-33	32	75	M-33	8	85 105	M-33 M-33	8 32
700	28”	165	40	840	24	910	315	M-33	20	M-33	40	75	M-33	8			
*750	30”	176	-	-	-	-	-	-	-	-	-	-	-	-			
800	32”	215	41	950	24	1025	380	M-36	20	M-36	40	90	M-36	8			
900	36”	246	48	1050	28	1125	415	M-36	24	M-36	48	90	M-36	8			
1000	40”	280	59	1170	28	1255	460	M-39	24	M-39	48	90	M-39	8			
*1050	42”	280	-	-	-	-	-	-	-	-	-	-	-	-			
*1100	44”	280	-	-	-	-	-	-	-	-	-	-	-	-			
1200	48”	254	78	1390	32	1485	460	M-45	28	M-45	56	105	M-45	8			

*: DN not defined by EN1092-1 PN-16 Dimensions in mm. For DN > 1200 consult our Technical Dept.

VAMEIN DE ESPAÑA, S.A.
Calle Temple, 1 - 28760 - Tres Cantos
Madrid (ESPAÑA)
Phone. (+34) 91 803 45 17 – Email: comercial@vamein.es

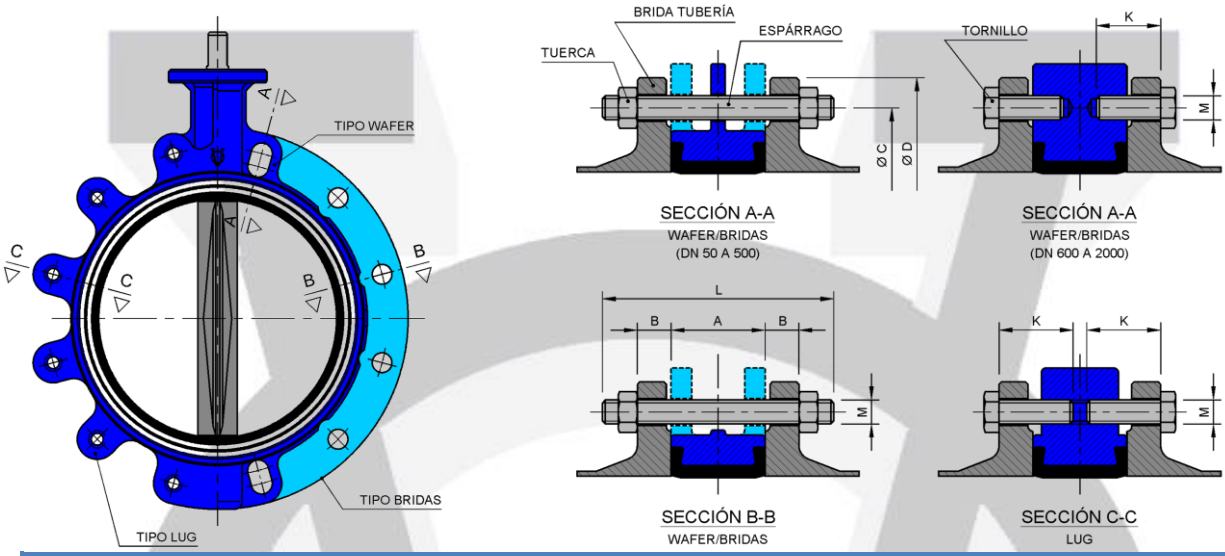

ASME B 16.5 CLASS 150 Lbs. STANDARD

VALVE			FLANGES				BOLTING FOR WAFER AND FLANGED TYPE								BOLTS FOR LUG TYPE		
							STUD BOLTS			NUTS		SCREWS			SCREWS		
DN		FACE TO FACE	THICKNESS	BOLT CENTRE	QUANTITY	EXTERNAL DIAMETER	LENGHT	THREAD	QUANTITY	THREAD	QUANTITY	LENGHT	THREAD	QUANTITY	LENGHT	THREAD	QUANTITY
mm	Inch	A	B	Ø C	Nº	Ø D	L	M	Nº	M	Nº	K	M	Nº	K	M	Nº
50	2”	43	19,1	120,6	4	150	120	5/8”UNC	4	5/8”UNC	8				35	5/8”UNC	8
65	2½”	46	22,2	139,7	4	180	130	5/8”UNC	4	5/8”UNC	8				40	5/8”UNC	8
80	3”	46	23,8	152,4	4	190	135	5/8”UNC	4	5/8”UNC	8				40	5/8”UNC	8
100	4”	52	23,8	190,5	8	230	140	5/8”UNC	8	5/8”UNC	16				45	5/8”UNC	16
125	5”	56	23,8	215,9	8	255	155	3/4”UNC	8	3/4”UNC	16				45	3/4”UNC	16
150	6”	56	25,4	241,3	8	280	155	3/4”UNC	8	3/4”UNC	16				45	3/4”UNC	16
200	8”	60	28,6	298,4	8	345	165	3/4”UNC	8	3/4”UNC	16				50	3/4”UNC	16
250	10”	68	30,2	361,9	12	405	185	7/8”UNC	12	7/8”UNC	24				60	7/8”UNC	24
300	12”	78	31,7	431,8	12	485	200	7/8”UNC	12	7/8”UNC	24				65	7/8”UNC	24
350	14”	78	34,9	476,2	12	535	215	1”UNC	12	1”UNC	24				70	1”UNC	24
400	16”	102	36,5	539,7	16	595	245	1”UNC	16	1”UNC	32				85	1”UNC	32
450	18”	113	39,7	577,8	16	635	265	1⅛”UN	16	1⅛”UN	32				90	1⅛”UN	32
500	20”	126	42,9	635	20	700	285	1⅛”UN	20	1⅛”UN	40				100	1⅛”UN	40
600	24”	154	47,6	749,3	20	815	330	1¼”UN	16	1¼”UN	32	90	1¼”UN	8	90 110	1¼”UN 1¼ ”UN	8 32
ASME B 16.47 CLASS-150 Lbs. SERIE-A																	
650	26”	175	68,0	806,45	24	870	380	1¼”UN	20	1¼”UN	40	110	1¼”UN	8			
700	28”	165	71,4	863,6	28	925	385	1¼”UN	24	1¼”UN	48	110	1¼”UN	8			
750	30”	176	74,6	914,4	28	985	400	1¼”UN	24	1¼”UN	48	120	1¼”UN	8			
800	32”	215	81,0	977,9	28	1060	460	1½”UN	24	1½”UN	48	135	1½”UN	8			
900	36”	246	90,5	1085,8	32	1170	510	1½”UN	28	1½”UN	56	140	1½”UN	8			
1000	40”	280	90,5	1200,1	36	1290	545	1½”UN	32	1½”UN	64	145	1½”UN	8			
1050	42”	280	96,8	1257,3	36	1345	570	1½”UN	32	1½”UN	64	155	1½”UN	8			
1100	44”	280	101,6	1314,5	40	1405	580	1½”UN	36	1½”UN	72	160	1½”UN	8			
1200	48”	254	108,0	1422.4	44	1510	560	1½”UN	40	1½”UN	80	150	1½”UN	8			

Dimensions in mm.

For DN > 1200 consult our Technical Dept.

VAMEIN DE ESPAÑA, S.A.
Calle Temple, 1 - 28760 - Tres Cantos
Madrid (ESPAÑA)
Phone. (+34) 91 803 45 17 – Email: comercial@vamein.es

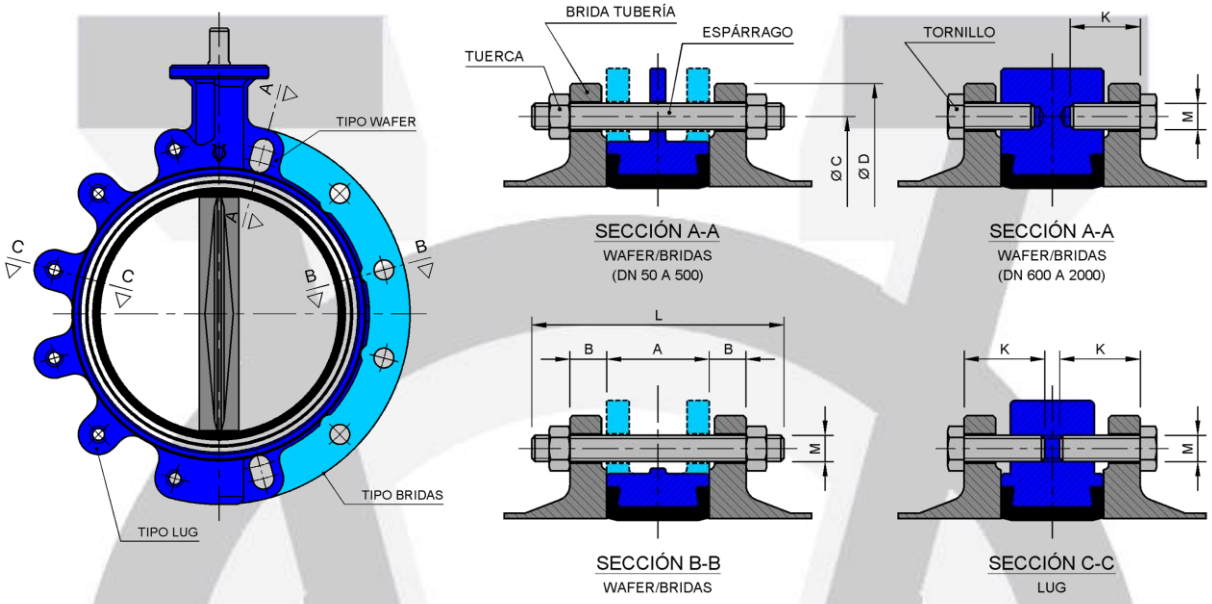

B.S. 10 TABLE-E STANDARD

VALVE			FLANGES (AS-2129)				BOLTING FOR WAFER AND FLANGED TYPE								BOLTS FOR LUG TYPE		
							STUD BOLTS			NUTS		SCREWS			SCREWS		
DN		FACE TO FACE	THICKNESS	BOLT CENTRE	QUANTITY	EXTERNAL DIAMETER	LENGHT	THREAD	QUANTITY	THREAD	QUANTITY	LENGHT	THREAD	QUANTITY	LENGHT	THREAD	QUANTITY
mm	Inch	A	B	Ø C	Nº	Ø D	L	M	Nº	M	Nº	K	M	Nº	K	M	Nº
50	2”	43	19	114,3	4	152,4	120	5/8”UNC	4	5/8”UNC	8				35	5/8”UNC	8
65	2½”	46	19	127,0	4	165,1	125	5/8”UNC	4	5/8”UNC	8				(1)	(1)	(1)
80	3”	46	19	146,1	4	184,2	125	5/8”UNC	4	5/8”UNC	8				(1)	(1)	(1)
100	4”	52	22	177,8	8	215,9	135	5/8”UNC	8	5/8”UNC	16				45	5/8”UNC	16
125	5”	56	22	209,6	8	254,0	150	3/4”UNC	8	3/4”UNC	16				45	3/4”UNC	16
150	6”	56	22	235,0	8	279,4	150	3/4”UNC	8	3/4”UNC	16				45	3/4”UNC	16
200	8”	60	25	292,1	8	336,6	160	3/4”UNC	8	3/4”UNC	16				50	3/4”UNC	16
250	10”	68	25	355,6	12	406,4	175	7/8”UNC	12	7/8”UNC	24				55	7/8”UNC	24
300	12”	78	29	406,4	12	457,2	190	7/8”UNC	12	7/8”UNC	24				65	7/8”UNC	24
350	14”	78	32	469,9	12	527,1	210	1”UNC	12	1”UNC	24				65	1”UNC	24
400	16”	102	32	520,7	12	577,9	235	1”UNC	12	1”UNC	24				(1)	(1)	(1)
450	18”	113	35	584,2	16	641,4	255	1 1/8”UN	16	1 1/8”UN	32				85	1 1/8”UN	32
500	20”	126	38	641,4	16	704,9	275	1 1/8”UN	16	1 1/8”UN	32				(1)	(1)	(1)
600	24”	154	48	755,7	16	825,5	310	1 1/4”UN	12	1 1/4”UN	24	95	1 1/4”UN	8	(1)	(1)	(1)
700	28”	165	51	845,0	20	910,0	345	1 1/4”UN	16	1 1/4”UN	32	95	1 1/4”UN	8			
750	30”	176	54	927,1	20	997,0	365	1 1/4”UN	16	1 1/4”UN	32	100	1 1/4”UN	8			
800	32”	215	54	984,0	20	1060	420	1 1/2”UN	16	1 1/2”UN	32	110	1 1/2”UN	8			
900	36”	246	64	1092,2	24	1174,8	470	1 1/2”UN	20	1 1/2”UN	40	120	1 1/2”UN	8			
1000	40”	280	67	1175	24	1255	510	1 1/2”UN	20	1 1/2”UN	40	125	1 1/2”UN	8			
1050	42”	280	70	1251	28	1335	515	1 1/2”UN	24	1 1/2”UN	48	130	1 1/2”UN	8			
1100	44”	280	-	-	-	-	-	-	-	-	-	-	-	-			
1200	48”	254	79	1410	32	1490	510	1 1/2”UN	28	1 1/2”UN	56	85	1 1/2”UN	8			

(1): This standard is not possible in LUG TYPE valves. Dimensions in mm. For DN > 1200 consult our Technical Dept.

VAMEIN DE ESPAÑA, S.A.
Calle Temple, 1 - 28760 - Tres Cantos
Madrid (ESPAÑA)
Phone. (+34) 91 803 45 17 – Email: comercial@vamein.es

8.7. FLANGE DRILLING STANDARDS SUITABLE TO VAMEIN BUTTERFLY VALVES.

DN		DIN												ASME B 16.5 CLASS150				ASME B16.47 CLASS 150 SERIE - A			
		PN-6				PN-10				PN-16											
mm	Pulg.	W	WL	B	L	W	WL	B	L	W	WL	B	L	W	WL	B	L	W	WL	B	L
50	2”																				
65	2½”																				
80	3”																				
100	4”																				
125	5”																				
150	6”																				
200	8”																				
250	10”																				
300	12”																				
350	14”																				
400	16”																				
450	18”																				
500	20”																				
600	24”																				
650	26”																				
700	28”																				
750	30”																				
800	32”																				
900	36”																				
1000	40”																				
1050	42”																				
1100	44”																				
1200	48”																				
1300	52”																				
1400	56”																				
1500	60”																				
1600	64”																				
1800	72”																				
2000	80”																				

W	: WAFER.		Standard assembly.
WL	: WAFER LIGHT		Special assembly (consult).
B	: FLANGED		**Assembly is not possible.**
L	: LUG.		Not covered by this standard

VAMEIN DE ESPAÑA, S.A.
Calle Temple, 1 - 28760 - Tres Cantos
Madrid (ESPAÑA)
Phone. (+34) 91 803 45 17 – Email: comercial@vamein.es

N		BS 10 / AS 2129								AWWA C-207 (B, D y E)				JIS							
		Table D				Table E								10 K				16 K			
mm	Inches	W	WL	B	L	W	WL	B	L	W	WL	B	L	W	WL	B	L	W	WL	B	L
50	2”																				
65	2½”																				
80	3”																				
100	4”																				
125	5”																				
150	6”																				
200	8”																				
250	10”																				
300	12”																				
350	14”																				
400	16”																				
450	18”																				
500	20”																				
600	24”																				
650	26”																				
700	28”																				
750	30”																				
800	32”																				
900	36”																				
1000	40”																				
1050	42”																				
1100	44”																				
1200	48”																				
1300	52”																				
1400	56”																				
1500	60”																				
1600	64”																				
1800	72”																				
2000	80”																				

W : WAFER.
WL : WAFER LIGHT
B : FLANGED
L : LUG.

Standard assembly.
Special assembly (consult).
Assembly is not possible.
Not covered by this standard

VAMEIN DE ESPAÑA, S.A.
Calle Temple, 1 - 28760 - Tres Cantos
Madrid (ESPAÑA)
Phone. (+34) 91 803 45 17 – Email: comercial@vamein.es

8.8. TIGHTENING TORQUE FIGURES OF SCREWS.

On placing a butterfly valve in a line it is very important to take the tightening torque figure of bolts and screws into account. As resistance of materials is limited, the screws cannot be tightened too much as they may lose their thread and this could cause watertightness problems in the pipe flanges with the valve.

A list with the tightening torque figures of the most usual screws in the mounting of "VAMEIN" butterfly valves is shown here below.

TIGHTENING TORQUE FIGURES OF SCREWS (N·m)			
THREADING		THREADING	
METRIC	UNC / UN	5.6	8.8
M-12		41	87
M-16		109	232
	5/8"	120	255
	3/4"	190	407
M-20		212	452
	7/8"	316	675
M-24		366	781
	1"	403	860
M-27		503	1073
	1-1/8"	597	1275
	1-1/4"	630	1346
M-30		664	1417
M-33		821	1753
	1-1/2"	1045	2229
M-36		1105	2358
M-39		1320	2817
	1-3/4"	1420	3030
M-45		1978	4221
M-52		2976	6349
M-56		3776	8056

N.B.: Torque figures valid for slightly greased screws.
Quality of material to DIN 267.

NOTE:

For installation in GRP (Glass Reinforced Pipelines) please consult the pipelines tightening torque also.

VAMEIN DE ESPAÑA, S.A.
Calle Temple, 1 - 28760 - Tres Cantos
Madrid (ESPAÑA)
Phone. (+34) 91 803 45 17 – Email: comercial@vamein.es

9. MAINTENANCE AND INSTRUCTIONS TO ASSEMBLE RESILIENT SEATED VALVES AND LEVERS.

9.1. MAINTENANCE. 1

9.2. INSTRUCTIONS TO ASSEMBLE RESILIENT SEATED VALVES. ..... 2 to 3

9.3. INSTRUCTIONS TO ASSEMBLE LEVERS. ..... 4 to 13

9.1. MAINTENANCE.

The VAMEIN butterfly valves have been designed and manufactured to obtain the maximum life and efficiency at minimum wear.

No periodic lubrication or maintenance is required.

All the VAMEIN butterfly valve components are replaceable. In order to replace any component the valve must be removed from the pipeline following steps listed below:

a) Move the disc near the closed position. As the valve is installed and we do not know the disc position, we must take into account that the parallel faces of the square or the keyway which are in the same position as the shaft and the disc.
b) In case of valves with square end shaft, a notch on the upper part of the shaft indicates the disc position.
c) Hold the valve and remove the flange bolts.
d) Replace the damaged component.
e) Place the valve into installation again.

As VAMEIN actuators are replaceable, and thanks to the security system avoiding the shaft to be blown out accidentally, they can be replaced on site without removing the valve from pipeline.

For any further information, drawings and instructions for special cases, please consult our Technical Department.

WAY OF STORAGE.

The valve must be stored in the half-open position, as it is shown in figure “A”. Disc ends must not exceed the liner surfaces.

FIGURE "A"

VAMEIN DE ESPAÑA, S.A.
Calle Temple, 1 - 28760 - Tres Cantos
Madrid (ESPAÑA)
Phone. (+34) 91 803 45 17 – Email: comercial@vamein.es

9.2. INSTRUCTIONS TO ASSEMBLE RESILIENT SEATED VALVES.

DISTRIBUTION			VAMEIN DE ESPAÑA S.A. (Madrid)	INSTRUCTIONS TO ASSEMBLE THE BUTTERFLY VALVES	EDITION	1
	RECEIVER	MANUFACTURE			DATE	02.06.03
	CONTROLLED COPY Nº	1		INS.DF9.200	PAGE	1 of 2

1. CHECKING BEFORE THE ASSEMBLY.

1.1. Check that the valve components to be assembled are those required on the ASSEMBLY ORDER, as far as type, size, flange standard and quality of material are concerned.

1.2. Make a visual control of every valve component in order to be sure that there are no damages happened during its handling. Figure 1

COMPONENTS

2. VALVE ASSEMBLY.

2.1. Vice parts or clamps being in contact with the valve body must be made of soft materials in order to avoid damages on the superficial coating.

2.2. Hold the body vertically by its lower part.

2.3. Place the centring device in the lower hole of the valve to fix the seat liner on the body. Figure 2.

BODY WITH CENTRING DEVICE

2.4. Bend the seat liner in such a way that it can be placed inside the valve body and assemble it with the smaller drill hole downwards. Figure 3.

BENT LINER

2.5. Remove the centring device.

2.6. Lubricate with silicone or suitable product both the seat liner flats and disc flats in order to facilitate the sliding of the disc on the seat (Do not use grease or oil in E.P.D.M. rubbers). Figure 4.

DISC ASSEMBLY

DOCUMENT	INSSUED	CHECKED	APPROVED
INS-MONTAJE.CDR	HEAD OF PRODUCTION	HEAD OF QUALITY ASSURANCE	FACTORY DIRECTOR

Document owned by VAMEIN DE ESPAÑA, S.A. : Its use or partial or total reproduction is forbidden without permission

VAMEIN DE ESPAÑA, S.A.
Calle Temple, 1 - 28760 - Tres Cantos
Madrid (ESPAÑA)
Phone. (+34) 91 803 45 17 – Email: comercial@vamein.es

VAMEIN DE ESPAÑA S.A. (Madrid)	INSTRUCTIONS TO ASSEMLE THE BUTTERFLY VALVES	EDITION	1
		DATE	02.06.03
	INS.DF9.200	PAGE	2 of 2

2.7. Place the disc on the seat througt the flats with the shaft driving device downwards by making the shaft pitch drill holes coincide and leaving the disc in the open position. Figure 5.

2.8. Place the shaft seal on the shaft. Figure 6.

2.9. Fit the shaft-shaft seal (previously silicone lubricated) on the valve with the help of the suitable tool. Figure 7.

2.10. Place the disc in the close position and take out the air. Figure 8.

2.11. Fit the bushing-retention ring in its housing and fix it with the revelant screw/s. Figure 9.

3. CHECKING AFTER THE ASSEMBLY.

3.1. Check that the valve works perfectly by operating it three (3) times from fully closed position.

3.2. Place the disc in the storage position (partially open, without sticking out of the seat liner). Figure 10.

4. MARKING AND LABELLING.

4.1. Fix VAMEIN standard label on the valve body and label with CE marking when applicable.

5

DISC ASSEMBLED

6

SHAFT SEAL ON SHAFT

7

8

SHAFT ASSEMBLY AND AIR TAKING OUT

10

STORAGE POSITION

9

VALVE ASSEMBLED

VAMEIN DE ESPAÑA, S.A.
Calle Temple, 1 - 28760 - Tres Cantos
Madrid (ESPAÑA)
Phone. (+34) 91 803 45 17 – Email: comercial@vamein.es

9.3. INSTRUCTIONS TO ASSEMBLE LEVERS.

DISTRIBUTION			
CONTROLLED COPY No.	RECEIVER	MANUFACTURING	
1			

VAMEIN de España, S.A.	INSTRUCTIONS FOR ASSEMBLY LEVER IN "VAMEIN" BUTTERFLY VALVES DN 50-200	EDITION	1
		DATE	03.05.12
	INS.DF9.201	PAGE	1 of 10

1. VERIFY COMPONENTS BEFORE ASSEMBLING.

LEVER

VALVE

DOCUMENT	INSSUED	CHECKED	APPROVED
INS–MONTAJE PALANCA	J. ALMODOVAR HEAD OF FABRICATION	A. SANCHEZ HEAD OF QUALITY ASSURANCE	J. ALMODOVAR FACTORY DIRECTOR

Document owned by VAMEIN DE ESPAÑA S.A. : Its use or partial or total reproduction is forbidden without permission

VAMEIN DE ESPAÑA, S.A.
Calle Temple, 1 - 28760 - Tres Cantos
Madrid (ESPAÑA)
Phone. (+34) 91 803 45 17 – Email: comercial@vamein.es

VAMEIN de España, S.A.	INSTRUCTIONS FOR ASSEMBLY LEVER IN "VAMEIN" BUTTERFLY VALVES DN 50-200	EDITION	1
		DATE	03.05.12
	INS.DF9.201	PAGE	2 of 10

2. REMOVE WASHER AND NUT FROM THE LEVER.

Document owned by VAMEIN DE ESPAÑA S.A. : Its use or partial or total reproduction is forbidden without permission

VAMEIN DE ESPAÑA, S.A.
Calle Temple, 1 - 28760 - Tres Cantos
Madrid (ESPAÑA)
Phone. (+34) 91 803 45 17 – Email: comercial@vamein.es

VAMEIN de España, S.A.	INSTRUCTIONS FOR ASSEMBLY LEVER IN "VAMEIN" BUTTERFLY VALVES DN 50-200	EDITION	1
		DATE	03.05.12
	INS.DF9.201	PAGE	3 of 10

3. HOLD VALVE TO THE WORKBENCH.

Document owned by VAMEIN DE ESPAÑA S.A. : Its use or partial or total reproduction is forbidden without permission

VAMEIN DE ESPAÑA, S.A.
Calle Temple, 1 - 28760 - Tres Cantos
Madrid (ESPAÑA)
Phone. (+34) 91 803 45 17 – Email: comercial@vamein.es

VAMEIN de España, S.A.	INSTRUCTIONS FOR ASSEMBLY LEVER IN "VAMEIN" BUTTERFLY VALVES DN 50-200	EDITION	1
		DATE	03.05.12
	INS.DF9.201	PAGE	4 of 10

4. SET THE VALVE IN THE CLOSED POSITION AND THE LEVER WITH THE INDICATOR IN POSITION "CLOSED" .

Document owned by VAMEIN DE ESPAÑA S.A. ; Its use or partial or total reproduction is forbidden without permission

VAMEIN DE ESPAÑA, S.A.
Calle Temple, 1 - 28760 - Tres Cantos
Madrid (ESPAÑA)
Phone. (+34) 91 803 45 17 – Email: comercial@vamein.es

VAMEIN de España, S.A.	INSTRUCTIONS FOR ASSEMBLY LEVER IN "VAMEIN" BUTTERFLY VALVES DN 50-200	EDITION	1
		DATE	03.05.12
	INS.DF9.201	PAGE	5 of 10

5. ASSEMBLE THE LEVER IN THE VALVE ENSURING THE LEVER IS ALIGNED WITH THE DISC.

Document owned by VAMEIN DE ESPAÑA S.A. : Its use or partial or total reproduction is forbidden without permission

VAMEIN DE ESPAÑA, S.A.
Calle Temple, 1 - 28760 - Tres Cantos
Madrid (ESPAÑA)
Phone. (+34) 91 803 45 17 – Email: comercial@vamein.es

VAMEIN de España, S.A.	INSTRUCTIONS FOR ASSEMBLY LEVER IN "VAMEIN" BUTTERFLY VALVES DN 50-200	EDITION	1
		DATE	03.05.12
	INS.DF9.201	PAGE	6 of 10

6. ASSEMBLE WASHER AND APPROACH HEXAGONAL NUTS LOOSELY.

Document owned by VAMEIN DE ESPAÑA S.A. : Its use or partial or total reproduction is forbidden without permission

VAMEIN DE ESPAÑA, S.A.
Calle Temple, 1 - 28760 - Tres Cantos
Madrid (ESPAÑA)
Phone. (+34) 91 803 45 17 – Email: comercial@vamein.es

VAMEIN de España, S.A.	INSTRUCTIONS FOR ASSEMBLY LEVER IN "VAMEIN" BUTTERFLY VALVES DN 50-200	EDITION	1
		DATE	03.05.12
	INS.DF9.201	PAGE	7 of 10

7. VERIFY THE DISC IS IN CLOSED POSITION.

Document owned by VAMEIN DE ESPAÑA S.A. : Its use or partial or total reproduction is forbidden without permission

VAMEIN DE ESPAÑA, S.A.
Calle Temple, 1 - 28760 - Tres Cantos
Madrid (ESPAÑA)
Phone. (+34) 91 803 45 17 – Email: comercial@vamein.es

VAMEIN de España, S.A.	INSTRUCTIONS FOR ASSEMBLY LEVER IN "VAMEIN" BUTTERFLY VALVES DN 50-200	EDITION	1
		DATE	03.05.12
	INS.DF9.201	PAGE	8 of 10

8. TIGHTEN HEXAGONAL NUTS USING 13mm WRENCH.

Document owned by VAMEIN DE ESPAÑA S.A. : Its use or partial or total reproduction is forbidden without permission

VAMEIN DE ESPAÑA, S.A.
Calle Temple, 1 - 28760 - Tres Cantos
Madrid (ESPAÑA)
Phone. (+34) 91 803 45 17 – Email: comercial@vamein.es

VAMEIN de España, S.A.	INSTRUCTIONS FOR ASSEMBLY LEVER IN "VAMEIN" BUTTERFLY VALVES DN 50-200	EDITION	1
		DATE	03.05.12
	INS.DF9.201	PAGE	9 of 10

9, TIGHTEN LEVER´S LOCKING SCREW WITH TORSION SHAFT USING 3mm ALLEN WRENCH.

⚠ THE LEVER´S LOCKING SCREW WITH TORSION SHAFT IS ACCESIBLE ONLY WITH THE LEVER IN CLOSED POSITION.

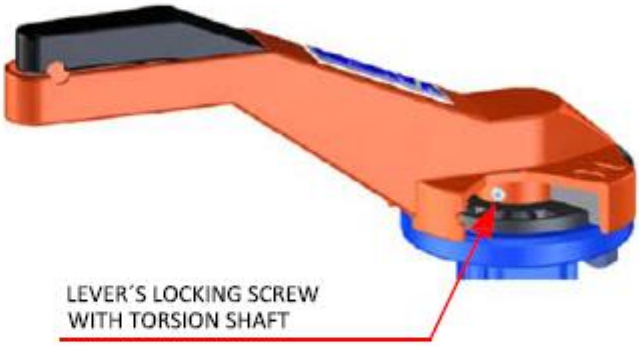

Document owned by VAMEIN DE ESPAÑA S.A. : Its use or partial or total reproduction is forbidden without permission

VAMEIN DE ESPAÑA, S.A.
Calle Temple, 1 - 28760 - Tres Cantos
Madrid (ESPAÑA)
Phone. (+34) 91 803 45 17 – Email: comercial@vamein.es

VAMEIN de España, S.A.	INSTRUCTIONS FOR ASSEMBLY LEVER IN "VAMEIN" BUTTERFLY VALVES DN 50-200	EDITION	1
		DATE	03.05.12
	INS.DF9.201	PAGE	10 of 10

10. SET VALVE IN STORING POSITION.

THE VALVE MUST BE STORED IN SEMI-OPEN POSITION AS SHOWN IN FIGURE. NOTE THAT THE EDGES OF THE DISK SHOULD NOT EXCEED BEYOND SEAT SURFACES.

Document owned by VAMEIN DE ESPAÑA S.A. : Its use or partial or total reproduction is forbidden without permission

VAMEIN DE ESPAÑA, S.A.
Calle Temple, 1 - 28760 - Tres Cantos
Madrid (ESPAÑA)
Phone. (+34) 91 803 45 17 – Email: comercial@vamein.es

10. GENERAL SALES CONDITIONS AND STATUS OF TECHNICAL HANDBOOK EDITION.

10.1. GENERAL SALES CONDITIONS. ..... 1 to 3
10.2. STATUS OF TECHNICAL HANDBOOK EDITION 4

10.1. GENERAL SALES CONDITIONS.

These General Sales Conditions govern relations between Vamein de España, S.A. (the Seller) and the Client, for the supply of butterfly valves, actuators and equipment. They will be applied in all purchase orders. These General Sales Conditions will be applicable to all matters to which no express reference is made in the Purchase Order.

1) COMMERCIAL AND TECHNICAL DOCUMENTATION.
- *a)* Commercial and technical documentation is aimed to be just informative. Only documents received as order confirmation will be considered as a contract.
- *b)* The commercial and technical information may be altered without notice.
- *c)* Vamein de España, S.A. reserves the right to correct any interpretation or typing errors made in quotations, invoices, price lists and any other documents.

2) OFFERS.
The prices and other conditions stated in the offers are intended as a guideline, and require subsequent confirmation by the Seller. The information contained in the annexes to the offer, such as catalogues, drawings technical documents, etc., are intended as a guideline, and in no way oblige the Seller.

3) VALIDITY OF THE CONTRACT.
The contract becomes valid when the Seller gives written notice to the Client of the acceptance of the order (Order Confirmation) and the Client has complied with his obligations until said time, as regards the order and any others which may be of application.

4) PRICES.
- *a)* Prices are in Euro and refer to material in Seller's warehouses without packaging, transports and taxes. Purchase Orders will be billed at the price established in the Order Confirmation.
- *b)* Transport cost will be paid for and will be at the risk of the Client, unless the opposite is expressly agreed.

5) TERMS OF DELIVERY.
- *a)* Delivery times will be agreed between Vamein de España, S.A. and the Client which are always considered Ex-Works. No penalty is accepted in any case, except those cases where agreed upon and approved by Vamein de España, S.A.
- *b)* Delivery dates are approximate dates. Delay in scheduled delivery shall not entitle Client to any claims against Seller and/or to cancel any purchase order. The delivery date, which has been agreed upon with Client, must be reasonably extended when circumstances arise which Seller cannot prevent despite using due diligence.
- c) Delivery terms begin to run when the contract becomes valid, and will only be prolonged in cases of "force majeure". Any delay by Client in complying with any obligations that affect the term of delivery will enable Seller to postpone said term of delivery.

VAMEIN DE ESPAÑA, S.A.
Calle Temple, 1 - 28760 - Tres Cantos
Madrid (ESPAÑA)
Phone. (+34) 91 803 45 17 – Email: comercial@vamein.es
www.vamein.com

d) Vamein de España, S.A. will not be responsible for any delays in delivery due to strikes, accidents, impossibility to obtain necessary materials and other causes beyond their control.

6) PAYMENT CONDITIONS.

a) Invoices will be paid as established therein.

b) Payment for partial deliveries will be made under the payment conditions agreed for each delivery.

c) In the event of delayed payments, Seller may claim interest thereon, calculated at the MIBOR rate over one month, plus five points, in addition to commissions and expenses.

d) The Seller reserves the rights over the materials supplied until Client has paid all amounts due for whatsoever concept. Client undertakes to support any measures necessary for the protection of our ownership.

e) The Seller will use the right of ownership on every manufactured product either if it is stored, installed, or deposited or directly purchased through retailers or third party suppliers.

7) CANCELLATION OF THE ORDER.

a) At first, no cancellation will be accepted for any already accepted in writing by Client. However, in the exceptional case that a cancellation is accepted, we reserve the right to invoice at least 25% of the net value of the invoice as cancellation costs.

b) Cancellation conditions will be agreed in each case.

8) COMPLAINTS AND REFUNDS.

a) All claims to the Seller must be received within a ten-day limit starting from the day when goods were received. The responsible for any missing our damaged goods on the way to destination will be born by the transport company.

b) Any complaints. must be made by the Client in writing, in such way as note is taken of its receipt. Returns will only be accepted with the written authorisation of the Seller In any case, all returns will give rise to a refund by VAMEIN DE ESPAÑA, S.A. for the amount of the order less a minimum of 5%, to cover quality, administration and storage costs. Acceptance of returned material is understood to be subject to the good state of the materials or equipment plus their packaging.

9) GUARANTEE.

a) Seller's guarantee covers the period stipulated in the order and, in default thereof, for one year starting from the date of invoice, provided the product is used according to the working or service conditions specified on the order form.

b) The guarantee only covers a maximum of the total value of the product and exclusively covers the substitution or repair of any defective parts or materials, at Seller's workshops. Labour and tools necessary to disassemble and assemble the product once installed, or any indirect costs incurred are expressly excluded.

c) The guarantee does not cover natural wear and tear of the parts, or any breakages which may occur due to causes unrelated to manufacture defects or defective handling of the merchandise.

d) Seller accepts no liability for losses or damages suffered by Client or third parties due to breakages.

e) The guarantee will be rendered invalid if Client or third parties should make any modifications or repairs without written authorisation by Seller.

VAMEIN DE ESPAÑA, S.A.
Calle Temple, 1 - 28760 - Tres Cantos
Madrid (ESPAÑA)
Phone. (+34) 91 803 45 17 – Email: comercial@vamein.es

f) The warranty is void if the products have been manipulated, if the defects are due to improper treatment, misapplication, repairs or modifications performed outside our workshops. The party claiming the existence of a manufacturing defect must prove the proper use of the product and if the correct installation. Return costs and forwarding defective materials will be borne by the buyer.

g) The Seller will not be responsible for the good performance of the valves where the actuator has not been mounted and checked by their staff and at their workshops.

h) In case of malfunction of the line or installation imputable to our butterfly valves, the operation of these valves will be checked on test benches at our facilities. As this test bench is duly certified, Vamein de España, S.A. will not be obliged to send any technicians to check the valves on site, as tests will only be validated when carried out in our test facilities following the corresponding standard. Vamein de España, S.A. does not assume any responsibility for hydraulic calculations of the installation.

i) No warranty shall apply in the event that the spare parts have not been installed in accordance with the procedures and instructions provided by the Seller.

j) If, by the end of the guarantee period, Client should not have made any written claim covered by the guarantee, Seller is released from all obligations.

10) APPLICABLE LAW AND ARBITRATION.

In any event which may derive from the interpretation or delivery of an order between Seller and Client, the UN Convention for the International Sales of Goods (Vienna Sales Convention) is applicable. All disputes arising out of or in connection with the contract, including its validity, invalidity, infringement or cancellation shall be exclusively settled under the Rules of Arbitration of the International Chamber of Commerce (ICC). The version of the Rules of Arbitration in force at the moment of notification of such proceedings shall be applicable. The ICC arbitration court at the legal domicile of the Seller, and for this purpose the Courts and Tribunals of Madrid town will be competent, and said matters will be judged in accordance with the Spanish laws.

VAMEIN DE ESPAÑA, S.A.
Calle Temple, 1 - 28760 - Tres Cantos
Madrid (ESPAÑA)
Phone. (+34) 91 803 45 17 – Email: comercial@vamein.es

10.2. STATUS OF TECHNICAL HANDBOOK EDITION

VAMEIN DE ESPAÑA, S.A.

CHANGES AND MODIFICATIONS

EDITION	DATE	*CHANGES AND MODIFICATIONS*
1	*02.01.00*	*INITIAL EDITION OF DOCUMENT.*
2	*03.06.02*	*INCLUDING ISO 9002:1994 APPROVAL CERTIFICATE AND EC CERTIFICATE OF CONFORMITY TO PED 97/23/CE.*
3	*01.03.04*	*GENERAL REVISION OF CHAPTER 1, SECTIONS 1.3, 1.4.1, 1.4.2, 1.4.14.* *GENERAL REVISION OF CHAPTER 2. PAGES 11,23,34,46,54 AND 65 FOR CHANGE OF ACTUATOR DIMENSIONS.* *GENERAL REVISION OF CHAPTER 4, SECTIONS 4.2, 4.2.1* *GENERAL REVISION OF CHAPTER 6, ALL SECTIONS AND INCLUDING ISO 9001:2000 APPROVAL CERTIFICATE.*
4	*15.06.05*	*UPDATING OF REFERENCE LIST. CHAPTER 1* *UPDATING OF CHAPTER 6 FOR RENEWAL OF EC CERTIFICATE OF CONFORMITY AND ISO 9001:2000 CERTIFICATE.*
5	*08.01.07*	*REVISION OF CHAPTER 6 FOR RENEWAL OF ISO 9001:2000 APPROVAL CERTIFICATE.*
6	*24.07.09*	*GENERAL REVISION OF TECHNICAL HANDBOOK FOR GENERAL UPDATING OF CHAPTERS, DRAWINGS AND APPROVAL CERTIFICATES.*
7	*14.01.10*	*REVISION OF CHAPTER 6 FOR RENEWAL OF ISO 9001:2008 APPROVAL CERTIFICATE.*
8	*24.02.11*	*INCLUDING WRAS APPROVAL CERTIFICATE IN CHAPTER 6 AND UPDATING OF REFERENCE LIST CHAPTER 1.*
9	*23.03.12*	*CHANGE THE TITLE AND CONTENT OF CHAPTER 11, "OTHER MANUFACTURED" BY CATALOGUE OF GALACTIC VALVE AND 3D DRAWINGS FOR 600 SERIES.* *3D DRAWINGS OF VALVE 100 SERIES OF DN 50 TO DN 300 INCLUDED IN CHAPTER-2.*
10	*12.12.12*	*ALL 3D DRAWINGS OF VALVES INCLUDED IN CHAPTER-2.*
11	*25.11.13*	*INCLUDING DVGW APPROVAL CERTIFICATE IN CHAPTER 6 AND UPDATING OF REFERENCE LIST CHAPTER 1.*
12	*25.07.16*	*INCLUDED VALVES DN 600 / 700 / 1200 ACCORDING TO EN 558 20-SERIES. UPDATED RELATED CHAPTERS.* *UPDATING GENERAL CONDITIONS OF SALE AND CERTIFICATES OF APPROVAL IN FORCE.* *INCLUDING ASSEMBLY INSTRUCCTIONS TO RESILIENT SEATED VALVES AND LEVERS.* *UPDATE EUROPEAN PRESSURE EQUIPMENT DIRECTIVE 2014/68/EU. (OLD DIRECTIVE 97/23/EC).* *UPDATE EUROPEAN ATEX DIRECTIVE 2014/34/EU. (OLD DIRECTIVE 94/9/EC).*
13	*10.10.19*	*UPDATING QUALITY CERTIFICATES IN CHAPTER 6.1, UPDATING DECLARATION OF CONFORMITY TEMPLATE IN CHAPTER 6.7.4 AND UPDATING OF REFERENCE LIST CHAPTER 1.*

VAMEIN DE ESPAÑA, S.A.
Calle Temple, 1 - 28760 - Tres Cantos
Madrid (ESPAÑA)
Phone. (+34) 91 803 45 17 – Email: comercial@vamein.es

11. TEFLON SEATED VALVES (GALACTIC VALVES)

11.1. COMMERCIAL BROCHURE ON GALACTIC VALVE ..... 1 to 20
11.2. 600 SERIES WAFER GALACTIC VALVE MANUFACTURING RANGE ..... 21 to 27

11.1. COMMERCIAL BROCHURE ON GALACTIC VALVE.

Commercial brochure on our GALACTIC valve follows below.

For any additional documentation or technical question please ask our Technical Department.

600 SERIES, Wafer type.
DN 50-300 (2”-12”)

VAMEIN DE ESPAÑA, S.A.
Calle Temple, 1 - 28760 - Tres Cantos
Madrid (ESPAÑA)
Phone. (+34) 91 803 45 17 – Email: comercial@vamein.es
www.vamein.com

11.2. 600 SERIES WAFER GALACTIC VALVE MANUFACTURING RANGE

We manufacture WAFER TYPE GALACTIC valve 600 SERIES from DN-50 mm (2") to -300 mm (12”).

Assembly between flanges: Multiflange system allowing with only one model of valve, the assembly between PN-10, PN-16 and ASME B 16.5 125/150 Lbs.

Standard working pressure: 10 Bar. For higher working pressures, ask our Technical Department.

Temperature limits: –40ºC a +200ºC (depending on working pressure).

As this is a pattern to be fitted between flanges, the mechanical stress of the pipe is transmitted to the valve only by compression on the body and there is no mechanical tension stress which might create watertightness problems.

LIST OF DRAWINGS				
WAFER TYPE GALACTIC VALVE				
600 SERIES				
DRAWING Nº	**D.N.**	**ACTUATOR**	**REFERENCE**	**PAG.**
WST-001	50 - 300	Bare shaft	S.621T/01	22
WST-002	50 - 300	Bare shaft	S.622T/02	23
WST-003	50 - 150	Lever	S.621PT/03	24
WST-004	50 - 150	Lever	S.622PT/04	25
WST-005	50 - 300	Gearbox	S.621RST/05	26
WST-006	50 - 300	Gearbox	S.622RST/06	27

VAMEIN DE ESPAÑA, S.A.
Calle Temple, 1 - 28760 - Tres Cantos
Madrid (ESPAÑA)
Phone. (+34) 91 803 45 17 – Email: comercial@vamein.es

COMPLETE INDEX

1. RESILIENT SEATED VALVES GENERAL INFORMATION. 1

1.1. FEATURES 2

1.1.1. BUTTERFLY VALVES ADVANTAGES 2

1.1.2. PARTICULAR FEATURES OF THE "VAMEIN" RESILIENT SEATED BUTTERFLY VALVE 3

1.2. APLICATIONS 4

1.2.1. INDUSTRIES 4

1.2.2. FLUIDOS 4

1.2.3. REFERENCES ..... 5 to 18

1.3. CONSTRUCTION AND STANDARDS. 20

1.3.1. BODY 20

1.3.2. DISC. 20

1.3.3. SHAFT. 21

1.3.4. SEAT. 21

1.3.5. BUSHING 22

1.3.6. BODY-SHAFT WATERTIGHTNESS SEAL "CHEVRON" TYPE. 22

1.3.8. DETAILS OF THE DIFFERENT DESIGNS OF VALVES. ..... 23 to 25

1.3.9. APLICABLE REGULATIONS 27

1.4. STANDARD MATERIALS FOR THE VAMEIN RESILIENT SEATED BUTTERFLY VALVES. 28

1.4.1. DUCTILE IRON. ASTM A395/A395M-99 GRADE 60-40-18 28

1.4.2. ACERO AL CARBONO ASTM A216/A216M-14E1 Gr. WCB. 28

1.4.3. ACERO INOXIDABLE FUNDIDO ASTM A351/A351M-15 Gr. CF8 29

1.4.4. CAST STAINLESS STEEL ASTM A351/A351M-15 Gr. CF8M. 29

1.4.5. BRONZE ASTM B-62. ALLOY UNS Nº C 83600. 29

1.4.6. ALUMINIUM BRONZE. ASTM B148-14. ALEACIÓN UNS Nº C 95800. 30

1.4.7. ALUMINIUM ALLOY. STANDARD EN-1706:2011 30

1.4.8. LAMINATED STAINLESS STEEL ASTM A276/A276M-16. TYPE 304. 31

1.4.9. LAMINATED STAINLESS STEEL ASTM A276/A276M-16. TYPE 316. 31

1.4.10. LAMINATED STAINLESS STEEL ASTM A276/A276M-16. TYPE 420. 31

1.4.11. STAINLESS STEEL. STANDARD EN-10088-3:2015 32

1.4.12. OTHER MATERIALS 32

1.4.13. CORRESPONDENCE CHART OF THE MOST USUAL MATERIALS FOR BODIES, DISCS AND SHAFTS 33

1.5. WEIGHT TABLE 34

1.6. SEAT LINERS. 35

1.6.1. FEATURES 35

1.6.2. MATERIALS. 35

1.6.3. MAIN FEATURES OF THE MOST COMMON SEATS. 36

1.6.4. TABLE OF TEMPERATURES. 37

1.6.5. RESISTANCE TO DRY HEAT TABLE SHOWN IN °C AND MAXIMUM PERCENTAGE OF VOLUME CHANGE AFTER BEING IMMERSED IN (ACCORDING TO ASTM -D 2000 / SAE J 200 STANDARDS). 37

1.7. PROTECTIVE COATINGS ON THE VAMEIN BUTTERFLY VALVES. 38

1.7.1. BODIES. 38

1.7.2. DISCS. 38

1.7.3. RILSAN® MAIN FEATURES. ..... 39 to 46

1.7.4. KATAPHORESIS COATING MAIN FEATURES. 47

VAMEIN DE ESPAÑA, S.A.
Calle Temple, 1 - 28760 - Tres Cantos
Madrid (ESPAÑA)
Phone. (+34) 91 803 45 17 – Email: comercial@vamein.es

1.7.5. HALAR® COATING MAIN FEATURES. 48
2. RESILIENT SEATED VALVES. MANUFACTURING RANGE 1
2.1. WAFER TYPE. 2
2.1.1. WAFER TYPE. 100 SERIES ....2 to 16
2.1.2. ALUMINIUM BODY LIGHT WAFER TYPE. 160 SERIES ....17 to 23
2.2. FLANGED TYPE. 200 SERIES. ....24 to 38
2.3. LUG TYPE. 500 SERIES. ....39 to 50
***3.* ACTUATORS FOR RESILENT SEATED VALVES. 1**
3.1. QUARTERTURN LEVER OPERATOR. 2
3.2. GEAR BOX OPERATOR. 3
3.3. PNEUMATIC ACTUATOR VP TYPE. ....4 to 5
3.4. PNEUMATIC ACTUATOR VCH TYPE. ....6 to 7
3.5. ELECTRIC ACTUATOR VAC TYPE. ....8 to 9
3.6. ELECTRIC ACTUATOR VAU TYPE. ....10 to 11
3.7. ELECTRIC ACTUATOR VJ TYPE. 12
3.8. DIMENSIONS OF VALVE ACTUATOR ASSEMBLIES. 13
3.9. SPECIAL EXECUTIONS. ....14 to 15
4. MATERIAL SELECTION / KEY FIGURES / TORQUE TABLE FOR RESILENT SEATED VALVES. 1
4.1. MATERIAL SELECTION 1
4.1.1. INTRODUCTION TO THE MATERIAL SELECTION TABLE. 2
4.1.2. MATERIAL SELECTION TABLE. ....3 to 14
4.2. "VAMEIN" BUTTERFLY VALVES OPTIONS AND ITS ACTUATORS. 15
4.2.1. EXAMPLE ON HOW TO USE THE CODE. 16
4.3. OPERATION TORQUE. 17
4.3.1. GENERAL FACTORS AFFECTING THE TORQUE VALUE OF VALVES 17
4.3.2. GUIDELINES TO SELECT A RIGHT TORQUE FACTOR. ....18 to 19
4.3.3. GENERAL NOTES TO BEAR IN MIND IN TORQUES 20
4.3.4. TORQUE TABLE FOR GENERAL SERVICE. 21
5. DATA FOR PURCHASE ORDER. 1
6. QUALITY ASSURANCE. 1
6.1. SIGNIFICANT CERTIFICATES. ....2 to 6
6.2. MATERIAL QUALITY CONTROL. 8
6.3. VISUAL AND DIMENSIONAL CONTROL. 8
6.4. EXTERNAL QUALITY VISUAL INSPECTION. 8
6.5. TEST PROCEDURES. 9
6.5.1. RESISTANCE TEST. 9
6.5.2. WATERTIGHTNESS TEST. 9
6.5.3. ACTUATOR TEST. 9
6.5.4. LABELLING AND PACKING CONTROL. 9
6.6. TEST CONTROLS CARRIED OUT BY INSPECTION COMPANIES. 10
6.7. ISSUE OF QUALITY AND TEST CERTIFICATES. ....10 to 16
7. HYDRAULIC FEATURES OF THE VAMEIN BUTTERFLY VALVES 1
7.1. PRESSURE DROP. ....1 to 2
7.2. Kv VALUE CHART (m^3/hour). 3
7.3. PRESSURE DROP TABLE. 4

VAMEIN DE ESPAÑA, S.A.
Calle Temple, 1 - 28760 - Tres Cantos
Madrid (ESPAÑA)
Phone. (+34) 91 803 45 17 – Email: comercial@vamein.es

7.4. CORRESPONDENCE CHART OF UNITS OF MEASUREMENT. 5
8. ASSEMBLY AND BOLTING LIST. 1
8.1. FLANGE DIMENSIONS. 2
8.2. ASSEMBLY INSTRUCTIONS. ..... 3 to 4
8.3. BUTTERFLY VALVE POSITIONING. 5
8.4. PIPE DISASSEMBLY IN THE VALVE DOWNSTREAM AREA. 5
8.5. TECHNICAL DATA (INSTALLATION EXAMPLES). 6
8.5.1. ASSEMBLY INSTRUCTIONS (CORRECT INSTALLATION). 6
8.5.2. ASSEMBLY INSTRUCTIONS (INCORRECT INSTALLATION).. 7
8.5.3. INSTALLATIONS EXAMPLES. ..... 8 to 9
8.6. BOLTING FOR INSTALLATION OF THE VAMEIN BUTTERFLY VALVES. ..... 10 to 14
8.7. FLANGE DRILLING STANDARDS SUITABLE TO VAMEIN BUTTERFLY VALVES. ..... 15 to 16
8.8. TIGHTENING TORQUE FIGURES OF SCREWS. 17
9. MAINTENANCE AND INSTRUCTIONS TO ASSEMBLE RESILIENT SEATED VALVES AND LEVERS. 1
9.1. MAINTENANCE. 1
9.2. INSTRUCTIONS TO ASSEMBLE RESILIENT SEATED VALVES. ..... 2 to 3
9.3. INSTRUCTIONS TO ASSEMBLE LEVERS. ..... 4 to 13
10. GENERAL SALES CONDITIONS AND STATUS OF TECHNICAL HANDBOOK EDITION. 1
10.1. GENERAL SALES CONDITIONS. ..... 1 to 3
10.2. STATUS OF TECHNICAL HANDBOOK EDITION 4
11. TEFLON SEATED VALVES (GALACTIC VALVES) 21
11.1. COMMERCIAL BROCHURE ON GALACTIC VALVE. ..... 21 to 20
11.2. 600 SERIES WAFER GALACTIC VALVE MANUFACTURING RANGE ..... 22 to 27

VAMEIN DE ESPAÑA, S.A.
Calle Temple, 1 - 28760 - Tres Cantos
Madrid (ESPAÑA)
Phone. (+34) 91 803 45 17 – Email: comercial@vamein.es